## DRAWING INDEX: WASTEWATER MANHOLE DRAWING SET FOR PIPELINES 375mm and GREATER

| DRAWING NO. | REVISION | DRAWING TITLE |
|---|---|---|
| 2000244.002 | B | STANDARD WASTEWATER MANHOLE SATELITE MANHOLE CONNECTION TO TRANSMISSION NETWORK |
| 2000244.009 | B | STANDARD WASTEWATER LAMPHOLE FRAME AND COVER CASTING DETAIL |
| 2000244.011 | B | STANDARD WASTEWATER CIRCULAR MANHOLE FOR LINES 375 NB TO 900 NB GEOMETRY AND DESIGN NOTES |
| 2000244.012 | E | STANDARD WASTEWATER CIRCULAR MANHOLE FOR LINES 375 NB TO 900 NB DIMENSIONS FOR CONSTRUCTION |
| 2000244.013 | H | STANDARD WASTEWATER CIRCULAR MANHOLE FOR LINES 375 NB TO 900 NB REINFORCEMENT |
| 2000244.014 | C | STANDARD WASTEWATER CIRCULAR MANHOLE FOR LINES 375 NB TO 900 NB DETAIL OF PIPE CONNECTION INTERNAL DROP EXTERNAL DROP CONNECTION |
| 2000244.025 | A | STANDARD WASTEWATER CIRCULAR MANHOLE POLYETHYLENE PIPE DN355 TO DN1000 GEOMETRY AND DESIGN CALCULATIONS |
| 2000244.026 | A | STANDARD WASTEWATER CIRCULAR MANHOLE POLYETHYLENE PIPE DN355 TO DN1000 MANHOLE BASE DIMENSIONS |
| 2000244.027 | A | STANDARD WASTEWATER CIRCULAR MANHOLES POLYETHYLENE PIPE DN355 TO DN1000 REINFORCING AND STEELWORK |
| 2000244.036 | A | STANDARD WASTEWATER CIRCULAR MANHOLES FOR POLYETHYLENE PIPES DN355 TO DN1000 PLAN VIEW OF BRANCH PIPE CONNECTIONS WITH INTERNAL P.E. DROPPERS |
| 2000244.037 | A | STANDARD WASTEWATER CIRCULAR MANHOLES FOR POLYETHYLENE PIPES DN355 TO DN1000 SECTIONS OF BRANCH PIPE CONNECTIONS WITH INTERNAL P.E. DROPPERS |
| 2000244.038 | A | STANDARD WASTEWATER CIRCULAR MANHOLES FOR POLYETHYLENE PIPES DN355 TO DN1000 P.E. CONNECTION & INTERNAL DROPPERS FOR HUMES TITAN PIPELINES |
| 2000244.039 | A | STANDARD WASTEWATER CIRCULAR MANHOLES FOR POLYETHYLENE PIPES DN355 TO DN1000 P.E. CONNECTION & INTERNAL DROPPERS FOR HYNDES PIPELINES |
| 2000244.040 | A | STANDARD WASTEWATER CIRCULAR MANHOLES FOR POLYETHYLENE PIPES DN355 TO DN1000 P.E. CONNECTIONS & INTERNAL DROPPERS FOR A.M.B.D. THICK WALL PIPELINES |
| 2000244.041 | A | STANDARD WASTEWATER CIRCULAR MANHOLES FOR POLYETHYLENE PIPES DN355 TO DN1000 END CAP SEATS AND RESTRAINTS DETAILS |

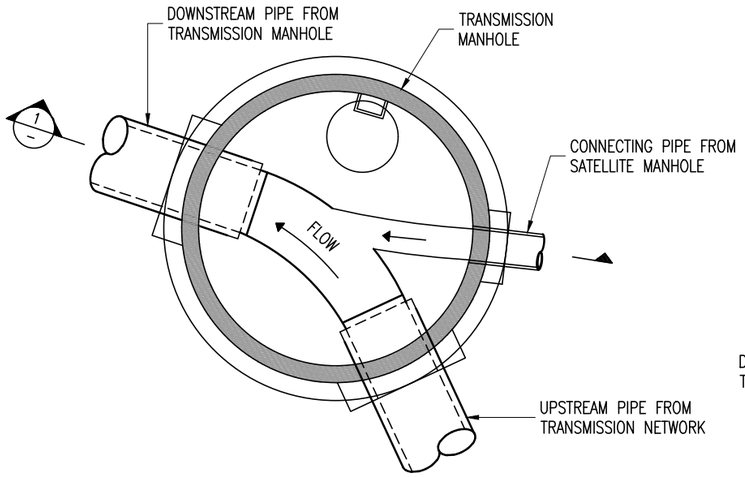


**ON GRADE CONNECTION – PLAN**

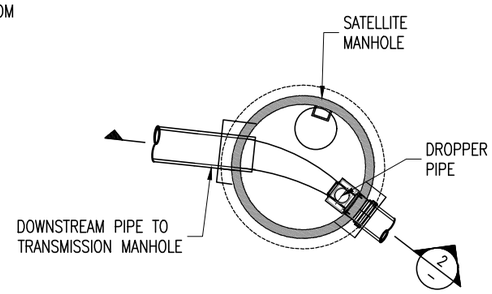


**DROPPER CONNECTION – PLAN**

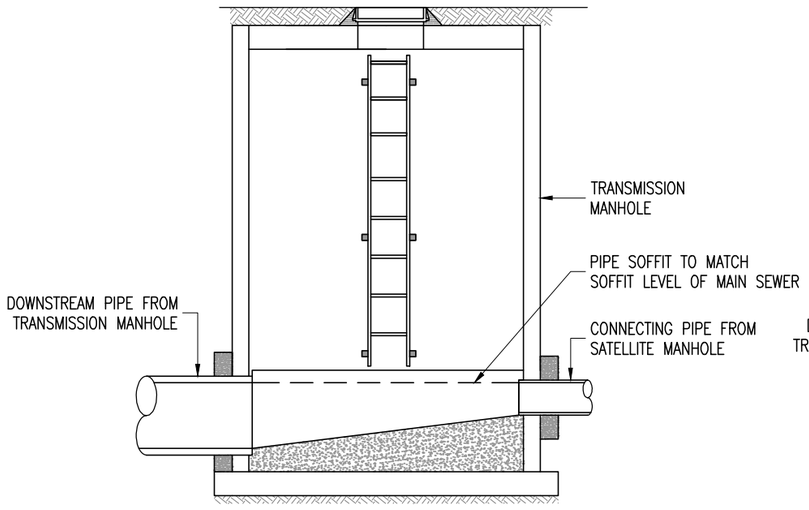


**SECTION THROUGH TRANSMISSION MANHOLE (1)**

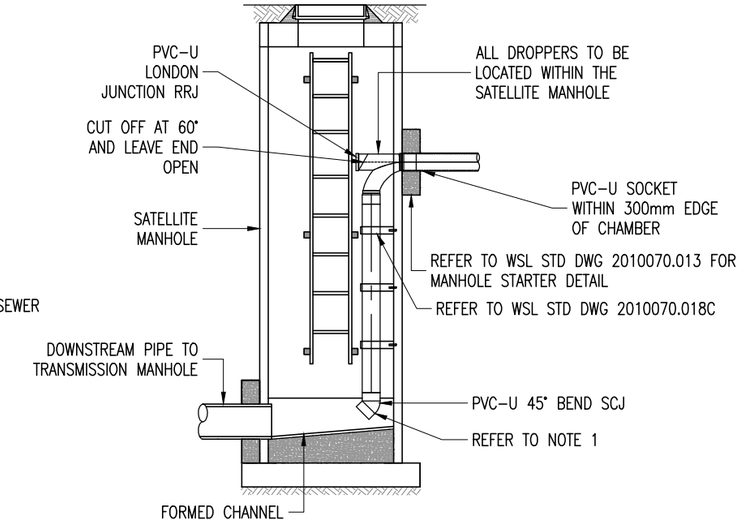


**SECTION THROUGH DROPPER CONNECTION (2)**

## NOTES

### NEW SEWERS

1) INCOMING ON–GRADE AND SHORT DROP CONNECTIONS TO WATERCARE SATELLITE MANHOLES WHERE THE DOWNSTREAM PIPE IS LESS THAN 750mm DIA. SHALL BE CONSTRUCTED WITH SOFFITS MATCHING OR HIGHER THAN THE MAIN OUTLET PIPE SOFFIT. WHERE THE OUTLET PIPE IS GREATER THAN 750MM DIA, THE CONNECTION IS TO BE D/4 ABOVE THE INVERT OF THE BENCHING.

2) INCOMING SEWER TO BE ANGLED AT 45° DOWNSTREAM UNLESS INDICATED OTHERWISE ON THE MANHOLE SCHEDULE.

3) ALL CONNECTIONS UTILISING A BEND INTO THE MAIN CHANNEL SHALL BE PROVIDED WITH RODDING ACCESS AT GROUND LEVEL.

4) CONNECTIONS WHICH DROP MORE THAN 1500mm SHALL INCORPORATE A SS 316 DROP PLATE.

### EXISTING SEWERS

5) NOTES FOR NEW SEWERS APPLY EXCEPT FOR THE FOLLOWING:

6) THE INVERT OF THE CHANNEL DISCHARGING INTO THE MAIN FLOW MAY BE ADJUSTED TO MINIMISE UNDERWATER WORK.

7) CONCRETE SUPPORT TO BENDS, DROP PIPES AND RODDING ACCESS SHALL BE REINFORCED WITH D12 STAPLES EPOXIED 100mm MIN. INTO THE EXISTING MANHOLE WALL. STAPLES SPACED AT 600mm CENTRES.

### MISCELLANEOUS

8) ALL DROPPERS ARE TO BE INSTALLED IN A SATELLITE MANHOLE PRIOR TO CONNECTION TO THE TRANSMISSION MANHOLE. INSTALLATION OF A DROPPER PIPE WITHIN A TRANSMISSION MANHOLE REQUIRES WSL APPROVAL.

9) SATELLITE MANHOLE SHALL BE SITUATED NOT LESS THAN 2m AND NOT MORE THAN 15m FROM THE TRANSMISSION MANHOLE

10) THE INCOMING SEWER, DROP PIPE AND RODDING EYE SHALL BE CONSIDERED AS PART OF THE LOCAL NETWORK SEWER.

11) WHERE THERE ARE MULTIPLE INCOMING DROPPER PIPES, THEY ARE TO BE ACCOMODATED WITHIN A SINGLE SATELLITE MANHOLE WHERE POSSIBLE. APPROVAL FROM WSL IS REQUIRED WHERE THERE ARE MULTIPLE SATELLITE MANHOLES WITH DROPPERS ENTERING A SINGLE TRANSMISSION MANHOLE.

12) SATELLITE MANHOLES CAN BE CONSTRUCTED TO NETWORK STANDARDS. WHERE DROP CONNECTIONS ARE DEEPER THAN 5M, A SPECIFIC DESIGN MAY BE REQUIRED. THE DOWNSTREAM PIPE OF THE SATELLITE MANHOLE TO CONNECT TO THE TRANSMISSION MANHOLE ENTERING AT AN ANGLE < 90 DEGREES.

| ISSUE | DATE | AMENDMENT | BY | APPD. |
|---|---|---|---|---|
| B | 05–25 | DROPPER SCHEMATIC UPDATE | F.F. | P.H. |
| A | 6–95 | WSL PLAN FORM AND GENERAL CHANGES | I.M.M. | |

| | | BY | DATE |
|---|---|---|---|
| DESIGNED | F. FAROOK | | 5–25 |
| DRAWN | F. FAROOK | | 5–25 |
| PRINCIPAL ENG. | W. STRYDOM | | 5–25 |

J. PIGGOT — OPERATIONS: HEAD OF WASTEWATER

A. DEUTSCHLE — PLANNING: HEAD OF WASTEWATER

COPYRIGHT
This drawing, the design and concept, remain the exclusive property of Watercare Services Limited and may not be used without approval Copyright reserved.

Watercare

STANDARD WASTEWATER MANHOLES
SATELLITE MANHOLE CONNECTION TO TRANSMISSION NETWORK

CAD FILE 2000244.002 — DATE 23–05–25
ORIGINAL SCALE A1 N.T.S — CONTRACT No.
DRAWING No. 2000244 002 — ISSUE B

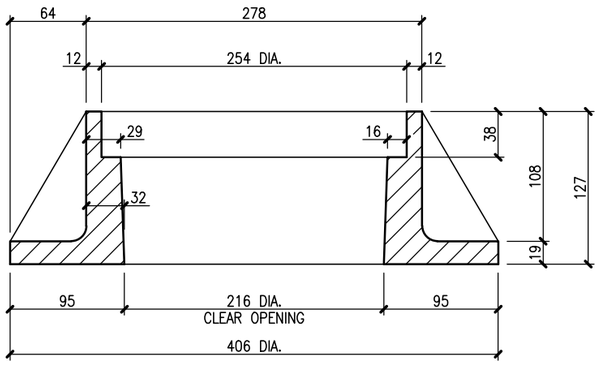


SECTION THRU FRAME (2)
SCALE. 1:2.5

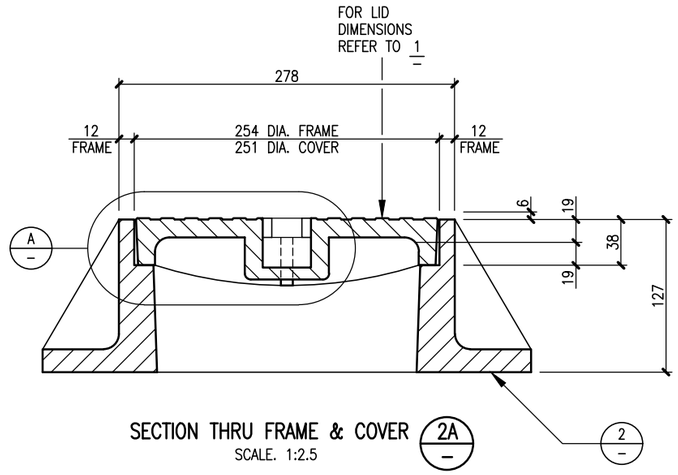


SECTION THRU FRAME & COVER (2A)
SCALE. 1:2.5

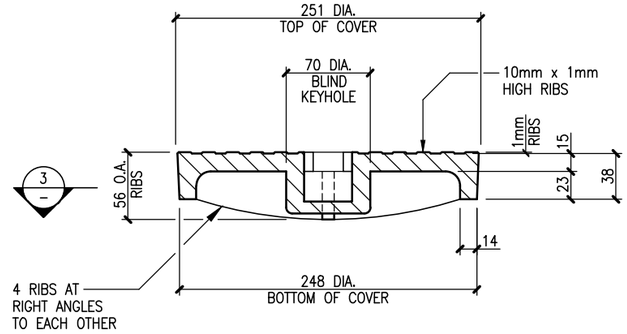


SECTION THRU COVER (1)
SCALE. 1:2.5

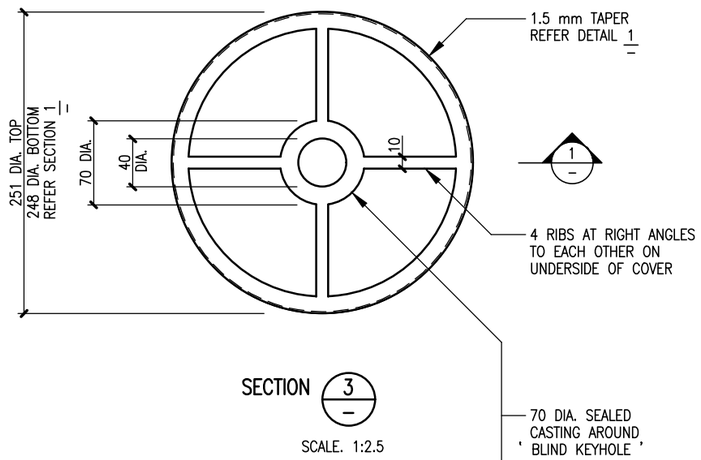


SECTION (3)
SCALE. 1:2.5

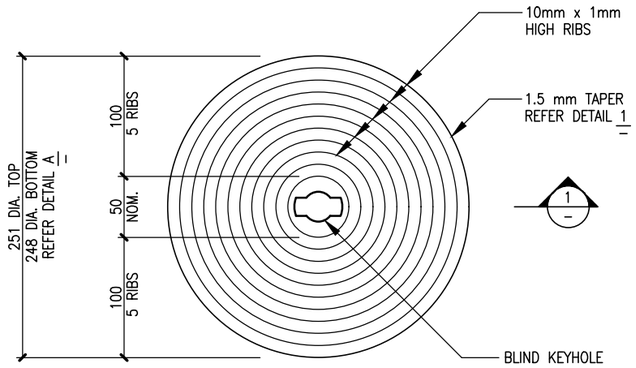


PLAN ON TOP OF COVER
SCALE. 1:2.5

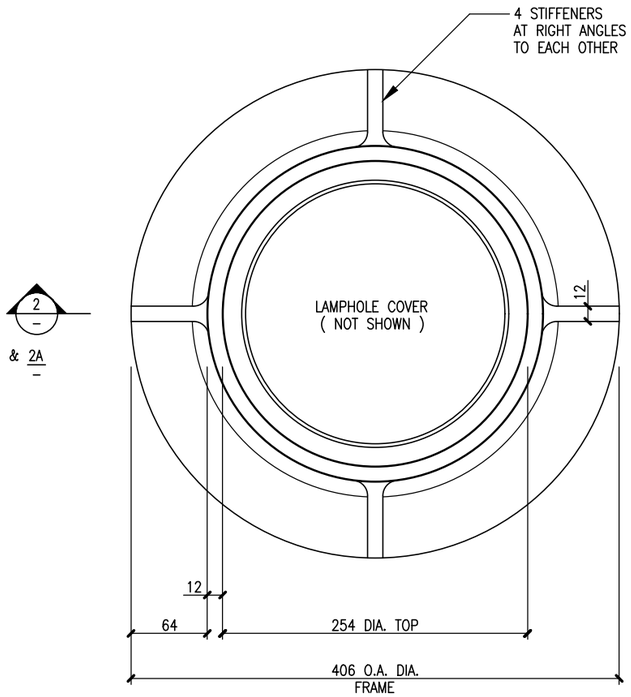


PLAN ON 220 DIA. LAMPHOLE FRAME
SCALE. 1:2.5

FIGURE – LAMPHOLE FRAME COVER
SCALE. N.T.S.

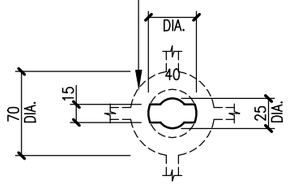


DETAIL OF KEY HOLE
SCALE. 1:2.5

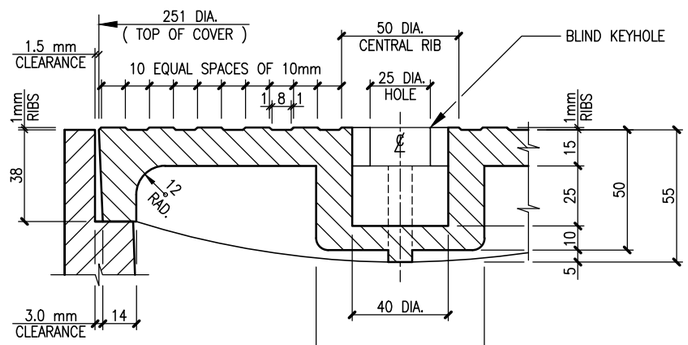


DETAIL (A)
SCALE. 1:1.25

| ISSUE | DATE | AMENDMENT | BY | APPD. |
|---|---|---|---|---|
| B | 05–25 | ADDITION OF LHFC IMAGE | F.F. | P.H. |
| A | 10–01 | DRAWING RENUMBERED | L.A.C. | B.M. |

| | | |
|---|---|---|
| DESIGNED | | |
| DES. CHECKED | B. MILLER. | 1/01 |
| DRAWN | L.A.C. | 1/01 |
| DWG. CHECKED | I. MOSES. | 1/01 |
| PROJECT LEADER | B. MILLER. | 1/01 |
| SECTION HEAD | A. KENNARD | 1/01 |
| | BY | DATE |

J. PIGGOT
OPERATIONS: HEAD OF WASTEWATER

A. DEUTSCHLE
PLANNING: HEAD OF WASTEWATER

COPYRIGHT
This drawing, the design and concept, remain the exclusive property of Watercare Services Limited and may not be used without approval Copyright reserved.

Watercare

STANDARD WASTEWATER STRUCTURES
LAMPHOLE FRAME & COVER
CASTING DETAILS

CAD FILE 2000244.009
DATE 23–05–25
ORIGINAL SCALE A1
AS SHOWN
CONTRACT No.
–
DRAWING No.
2000244 009
ISSUE
B

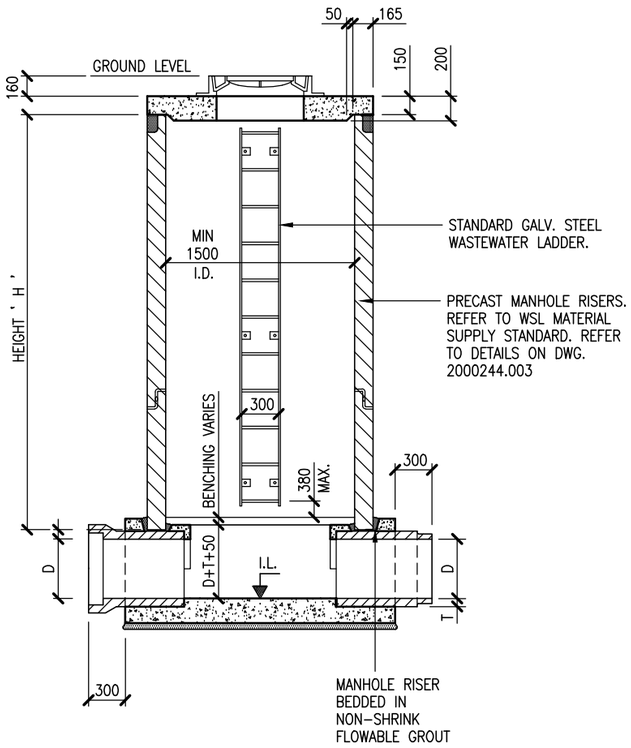


TYPICAL SECTION

SCALE. 1:50

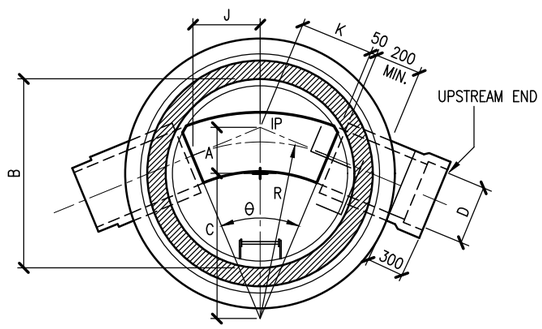


TYPE A1

SCALE. N.TS.

THIS SHEET IS FOR DESIGN PURPOSES ONLY. FOR CONSTRUCTION USE SHEET 2000244.012, 013, 014

MANHOLE PLATFORMS TO BE INSTALLED WHERE H > 6000 – SEE 2000244.015

## DESIGN PROCEDURES FOR CIRCULAR MANHOLES

1. GET B, D AND $\theta$
2. IF $\sin\frac{\theta}{2} > 0.1333\frac{B}{D}$ OR IF $\theta > \theta_c$, UPSIZE MANHOLE
3. TYPE A1 : CALCULATE J, K, R, THEN A AND C

## NOTES

1. MINIMUM CURVE RADIUS = 3 x D
2. DIMENSIONS A, J AND C ARE DERIVED EMPIRICALLY TO GIVE REASONABLE PROPORTIONS. THEY MAY BE VARIED FOR SPECIFIC DESIGN OTHER DIMENSIONS FOLLOW FROM GEOMETRY.
3. AS ANGLE OF DEFLECTION INCREASES, THE DESIGN PROCEDURE ADJUSTS THE RADIUS SO THE CURVE FITS BETWEEN TWO POINTS, DISTANCE 2 x J APART (TYPE A1 MANHOLES)
4. JUNCTION MANHOLES, CHANGES OF PIPE SIZE ETC, SHOULD BE SPECIFICALLY DESIGNED AND DRAWN.
5. PRECAST MANHOLES CAN BE USED UP TO A DEPTH OF 10m. APPROVAL FROM WATERCARE IS REQUIRED FOR MANHOLES DEEPER THAN 10m. REFER TO WATERCARE MATERIAL SUPPLY STANDARD FOR ALL APPROVED PRECAST MANHOLES.

## MANHOLE DIMENSIONS

**TYPE A1 MANHOLES** ( $\frac{\theta}{2} < 0.1333\frac{B}{D}$ )

B = MANHOLE I.D. D = PIPE I.D. ( ACTUAL ) $\theta$ = PIPE DEFLECTION ANGLE

$J = 0.4B$ $K = \frac{J}{\cos\frac{\theta}{2}}$ $R = \frac{K}{\tan\frac{\theta}{2}}$ $A + C = \sqrt{(K^2 + R^2)}$

DIMENSION A TO BE CHOSEN BY DESIGNER

$A = (0.25B - 0.4D + 0.25B \times \tan\frac{\theta}{2})$ IS SUITABLE IN MOST CASES.

| ISSUE | DATE | AMENDMENT | BY | APPD. |
|---|---|---|---|---|
| B | 05-25 | REMOVAL OF TYPE A2 MANHOLE | F.F. | P.H. |
| A | 11-09 | MANHOLE LID DIMENSION RAISED | G.B. | B.M. |

| | | |
|---|---|---|
| DESIGNED | C. RODLIFFE | 11-01 |
| DES. CHECKED | D. McCANN | 11-01 |
| DRAWN | L. A. COLLINGE | 11-01 |
| DWG. CHECKED | I. MOSES. | 11-01 |
| PROJECT LEADER | C. RODLIFFE | 11-01 |
| A.D. APPROVED | A. KENNARD | 11-01 |
| | BY | DATE |

J. PIGGOT
OPERATIONS: HEAD OF WASTEWATER

A. DEUTSCHLE
PLANNING: HEAD OF WASTEWATER

COPYRIGHT
This drawing, the design and concept, remain the exclusive property of Watercare Services Limited and may not be used without approval Copyright reserved.

Watercare

STANDARD CIRCULAR WASTEWATER MANHOLES
FOR LINES 375 N.B. TO 900 N.B.
GEOMETRY AND DESIGN NOTES

CAD FILE 2000244.011B DATE 23-05-25
ORIGINAL SCALE A3 AS SHOWN
CONTRACT No. –
DRAWING No. 2000244 .011
ISSUE B

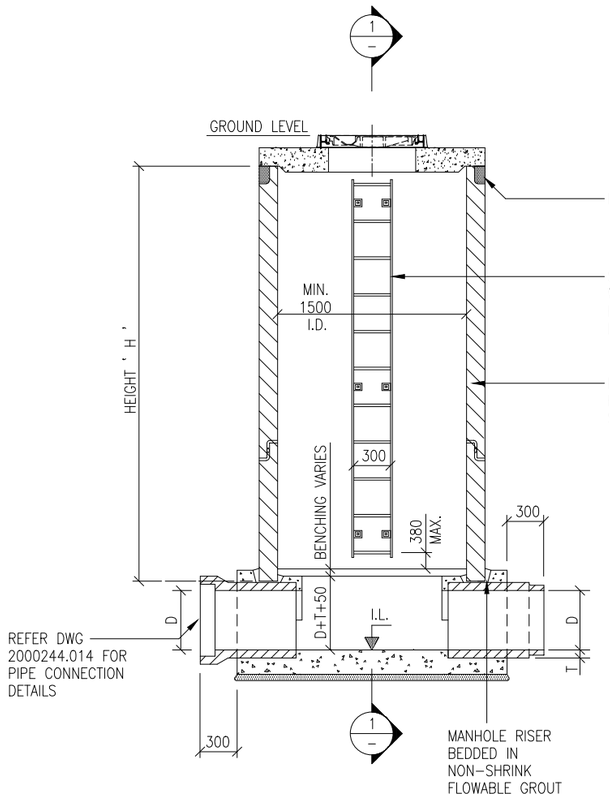


SECTION 2

SCALE. 1:50

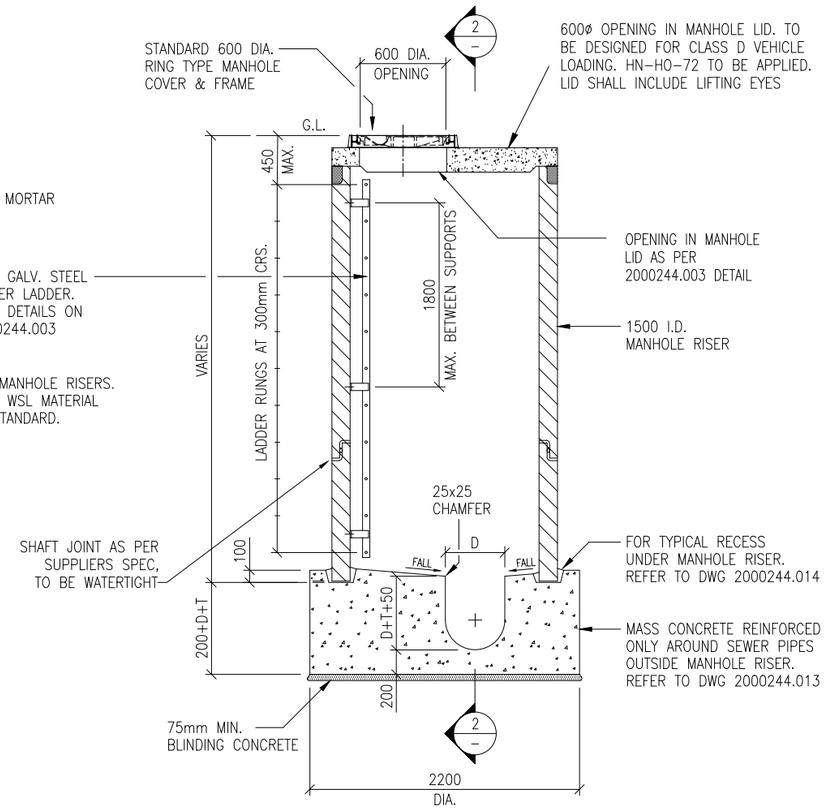


SECTION 1

SCALE. 1:50

NOTE

MANHOLE PLATFORMS TO BE INSTALLED WHERE H > 6m
REFER 2000244.015 FOR DETAILS

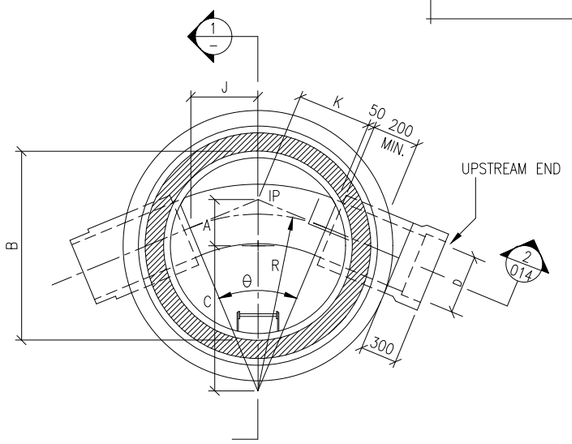


TYPE A1

SCALE. N.TS.

## DIMENSIONS FOR MANHOLE CONSTRUCTION

| MANHOLE NUMBER | TYPE | PIPE I.D. | θ | R | K | A | B | C | H |
|---|---|---|---|---|---|---|---|---|---|
| | | | | | | | | | |
| | | | | | | | | | |
| | | | | | | | | | |
| | | | | | | | | | |
| | | | | | | | | | |
| | | | | | | | | | |
| | | | | | | | | | |
| | | | | | | | | | |

NOTE: θ, R, K, A, B, C AND H APPLY TO CIRCULAR MANHOLES,

(INDIVIDUAL MANHOLE DIAGRAMS TO BE DRAWN HERE OR ALTERNATELY ON A SEPARATE SHEET)

EXAMPLE:

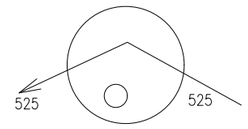


MH 15

| ISSUE | DATE | AMENDMENT | BY | APPD. |
|---|---|---|---|---|
| E | 05-25 | REMOVAL OF TYPE A2 MANHOLE | F.F. | P.H. |
| D | 03:14 | KORUM LID CHANGED TO HAVE 600ø OPENING | L.C. | C.H. |
| C | 07:12 | KORUM LID ADDED & REFERENCE CORRECTED | I.M. | C.H. |
| B | 05:12 | LID & RISER REFERENCES ADDED | I.M. | C.H. |
| A | 11:09 | MH LID RAISED. BACKFILL NOTE REMOVED | G.B. | B.M. |

| | BY | DATE |
|---|---|---|
| DESIGNED | C. RODLIFFE | 11-01 |
| DES. CHECKED | D. McCANN | 11-01 |
| DRAWN | L. A. COLLINGE | 11-01 |
| DWG. CHECKED | I. MOSES. | 11-01 |
| PROJECT LEADER | C. RODLIFFE | 11-01 |
| A.D. APPROVED | A. KENNARD | 11-01 |

J. PIGGOT
OPERATIONS: HEAD OF WASTEWATER

A. DEUTSCHLE
PLANNING: HEAD OF WASTEWATER

COPYRIGHT
This drawing, the design and concept, remain the exclusive property of Watercare Services Limited and may not be used without approval Copyright reserved.

Watercare

STANDARD CIRCULAR WASTEWATER MANHOLES
FOR LINES 375 N.B. TO 900 N.B.
DIMENSIONS FOR CONSTRUCTION

CAD FILE 2000244.012E
DATE 23-05-25
ORIGINAL SCALE A3 AS SHOWN
CONTRACT No. –
DRAWING No. 2000244 .012
ISSUE E

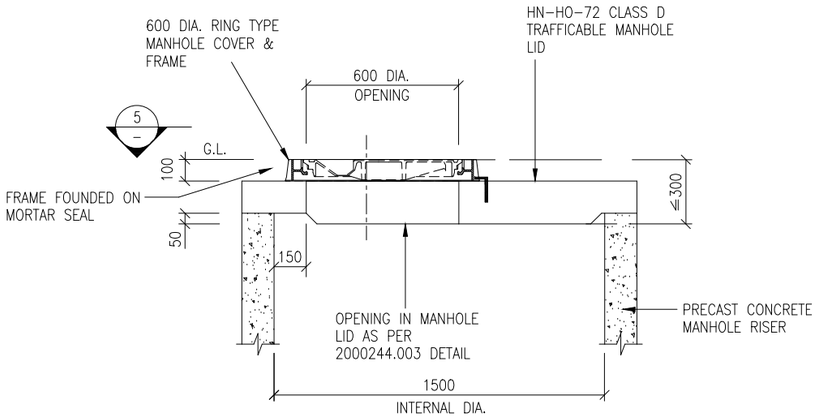


SECTION 6 / – MH LID
N.T.S.

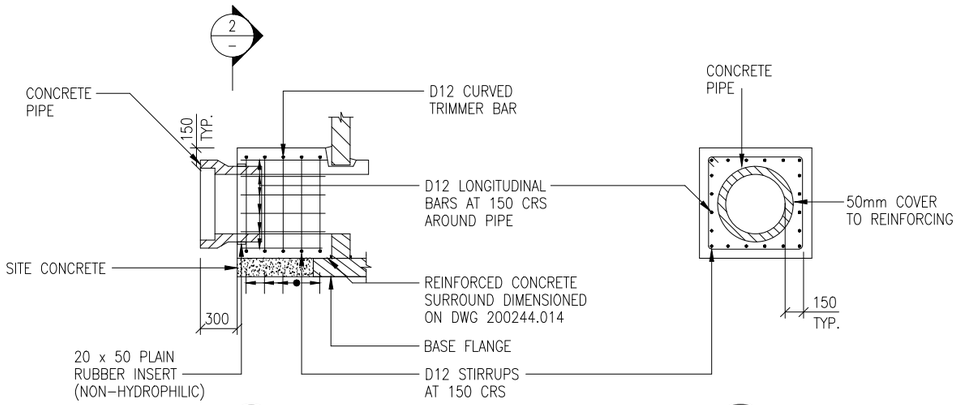


SECTION 3 / – SECTION 2 / –
SCALE. 1:50 SCALE. 1:50

CORBEL DETAIL

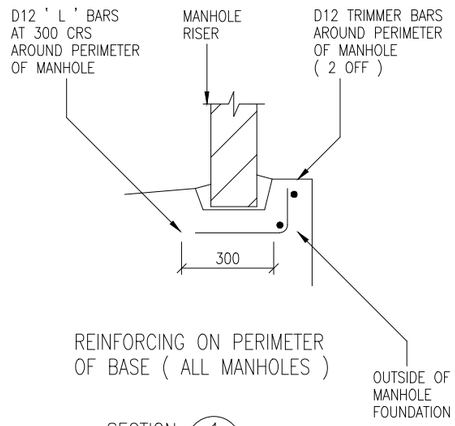


REINFORCING ON PERIMETER OF BASE ( ALL MANHOLES )

SECTION 1 / –
SCALE. 1:20

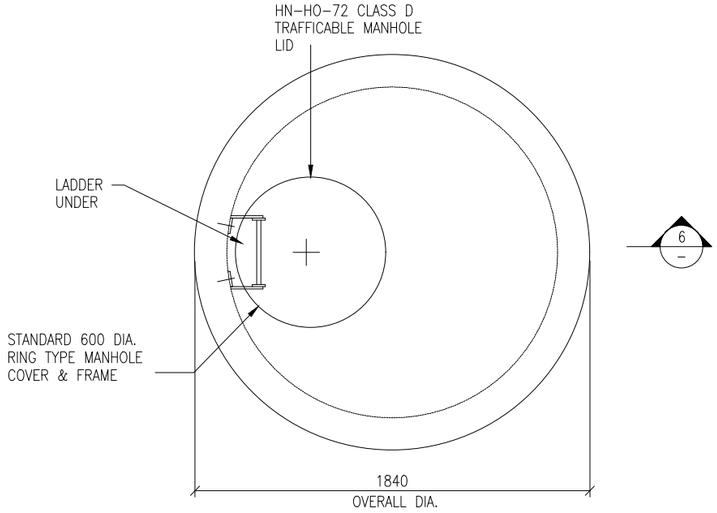


PLAN 5 / – MH LID
N.T.S.

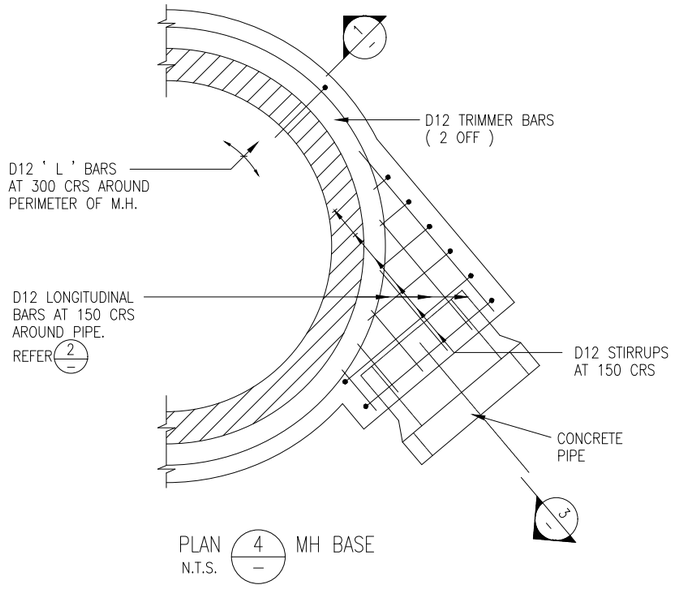


PLAN 4 / – MH BASE
N.T.S.

STEELWORK NOTES

1. ALL SHARP EDGES ON STEELWORK TO BE GROUND OFF.
2. ALL STEELWORK TO BE HOT DIPPED GALVANISED AFTER FABRICATION.
3. TOP RUNG TO BE AT FLOOR LEVEL WHEN STEPPING OFF FLOORS OR PLATFORMS.
4. PLEASE REFER DRAWING 2000244.024 FOR MANHOLE LADDER & STEP IRON DETAILS
5. ALL STEP IRONS, CAST IRON FRAMES AND COVERS WILL BE SUPPLIED BY WATERCARE SERVICES.

| ISSUE | DATE | AMENDMENT | BY | APPD. |
|---|---|---|---|---|
| H | 05-25 | UPDATE TO TRAFFICABLE AND PRECAST LID | F.F. | P.H. |
| G | 03-14 | 620ø OPENING THROUGH R.C. MANHOLE LID | L.C. | C.H. |
| F | 07-12 | KORUM LID AND OPENING SIZES ADDED | I.M. | C.H. |
| E | 04-12 | MANHOLE OPENING MOVED 75mm INWARD | I.M. | C.H. |
| D | 11-09 | REINF. NOTES REMOVED & MH LID DIMENSION | GB | B.M. |
| C | 02-06 | FRAME FIXING DETAIL AMENDED | I.M.M. | I.W. |

| | | |
|---|---|---|
| DESIGNED | C. RODLIFFE | 11-01 |
| DES. CHECKED | D. McCANN | 11-01 |
| DRAWN | L. A. COLLINGE | 11-01 |
| DWG. CHECKED | I. MOSES. | 11-01 |
| PROJECT LEADER | C. RODLIFFE | 11-01 |
| A.D. APPROVED | A. KENNARD | 11-01 |
| | BY | DATE |

J. PIGGOT
OPERATIONS: HEAD OF WASTEWATER

A. DEUTSCHLE
PLANNING: HEAD OF WASTEWATER

COPYRIGHT
This drawing, the design and concept, remain the exclusive property of Watercare Services Limited and may not be used without approval Copyright reserved.

Watercare

STANDARD CIRCULAR WASTEWATER MANHOLES
FOR LINES 375 N.B. TO 900 N.B.
REINFORCING AND STEELWORK FOR CONCRETE PIPES

CAD FILE 2000244.013H DATE 23-05-25
ORIGINAL SCALE A3 AS SHOWN
CONTRACT No. –
DRAWING No. 2000244 .013
ISSUE H

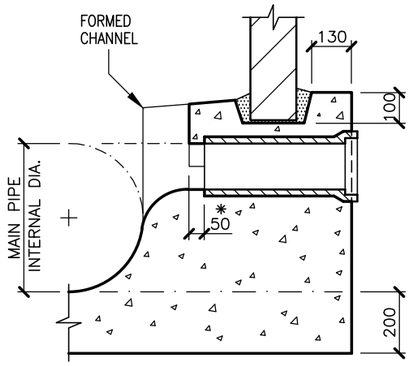


## NETWORK CONNECTION FROM SATELLITE MANHOLE

* COVER TO END OF PIPE IS REQUIRED ONLY WHERE CUT REINFORCING IS EXPOSED.

SCALE. 1:20

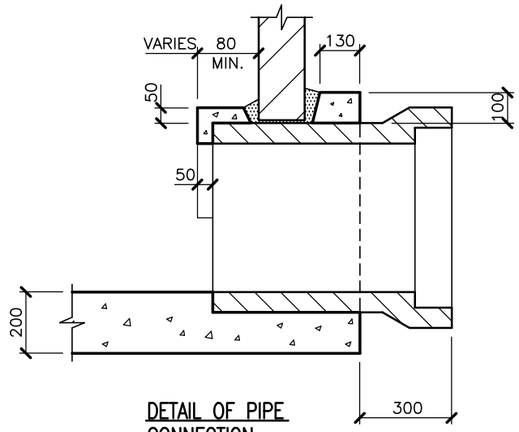


## DETAIL OF PIPE CONNECTION

SCALE. 1:20

2/012

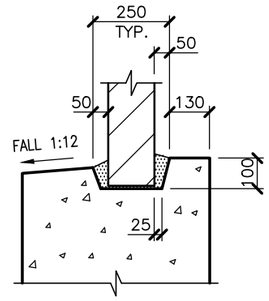


## DETAIL OF RECESS FOR MANHOLE RISER

SCALE. 1:20

## NOTES

1. MINIMUM 28 DAY STRENGTH FOR CONCRETE IN BASE, SHAFT AND LID TO BE 25MPa
2. ALL REINFORCEMENT TO BE GRADE 500E
3. MINIMUM COVER TO REINFORCEMENT TO BE 50mm ON UNDERSIDE OF ROOF, 40mm ELSEWHERE
4. SURFACE FINISH TO NZS 3114
   INTERNAL SURFACES EXCEPT CHANNELS – F3 OR U3
   CHANNELS – F4
   SURFACE FINISHES TO BE ACHIEVED WITHOUT PLASTERING
5. MANHOLE BASE AND CHANNEL ARE TO BE CONSTRUCTED AS ONE UNIT
6. SECTIONS SHOWN ON THIS DRAWING DO NOT NECESSARILY SHOW THE TRUE THICKNESS OF THE MANHOLE RISER AND RECESS FOR IT.

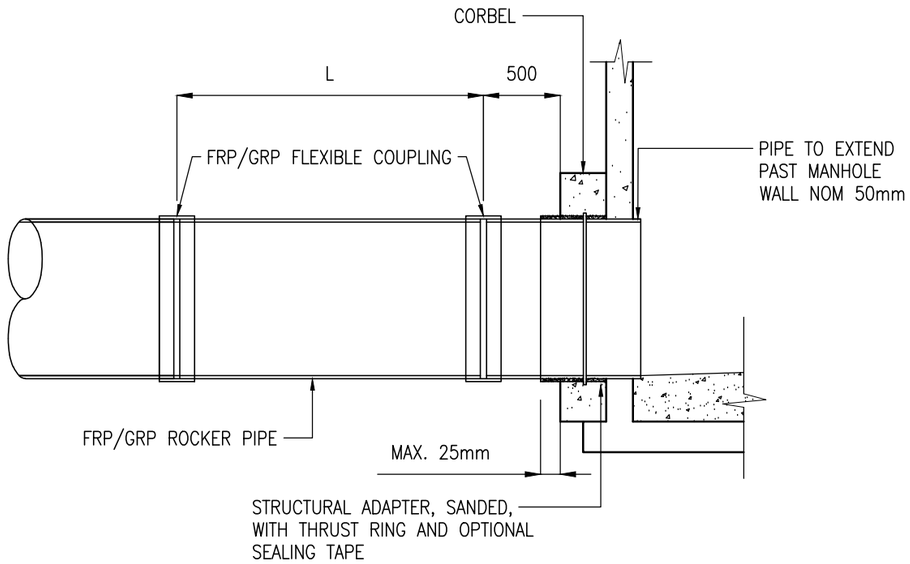


## GRP & FRP PIPE CONNECTION

## NOTES

1. ALL COUPLINGS SHALL BE INSTALLED AS PER MANUFACTURER'S INSTRUCTIONS, INCLUDING ALLOWABLE STATIC DEFLECTION AND END SEPARATION.

| RECOMMENDED ROCKER PIPE LENGTH | |
|---|---|
| DN (mm) | LENGTH (mm) |
| 300–450 | 500 |
| 450–900 | 1000 |
| 900–1400 | 2000 |
| 1400 – 3000 | 3000 |

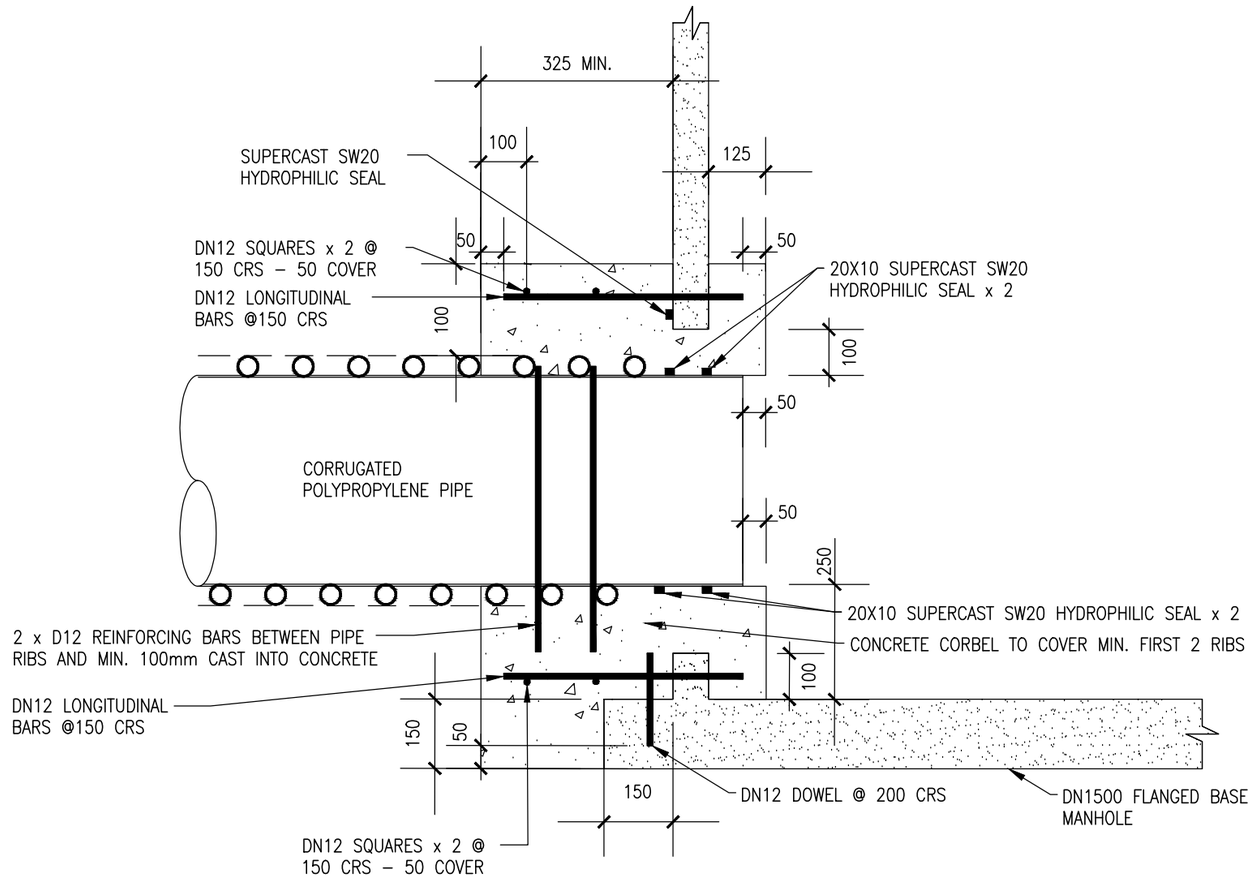


## CORRUGATED POLYPROPYLENE PIPE CONNECTION

SCALE. N.T.S

| ISSUE | DATE | AMENDMENT | BY | APPD. |
|---|---|---|---|---|
| C | 05–25 | ADDITION OF GRP/FRP PIPE DETAIL | F.F. | P.H. |
| C | 05–25 | ADDITION OF CORRUGATED PP PIPE DETAIL | F.F. | P.H. |
| B | 03–14 | DROP PIPE NOTES ADDED | L.C. | C.H. |
| A | 11–09 | MH LID DIMENSION. CONC/REINF NOTE ADDED | G.B. | B.M. |
| | | GROUT ADDED AND CERAMIC PIPE OPTION | | |

| | BY | DATE |
|---|---|---|
| DESIGNED | C. RODLIFFE | 11–01 |
| DES. CHECKED | D. McCANN | 11–01 |
| DRAWN | L. A. COLLINGE | 11–01 |
| DWG. CHECKED | I. MOSES. | 11–01 |
| PROJECT LEADER | C. RODLIFFE | 11–01 |
| A.D. APPROVED | A. KENNARD | 11–01 |

J. PIGGOT
OPERATIONS: HEAD OF WASTEWATER

A. DEUTSCHLE
PLANNING: HEAD OF WASTEWATER

COPYRIGHT
This drawing, the design and concept, remain the exclusive property of Watercare Services Limited and may not be used without approval Copyright reserved.

Watercare

STANDARD CIRCULAR WASTEWATER MANHOLES
DETAILS OF PIPE CONNECTIONS

CAD FILE 2000244.014C
DATE 23–05–25
ORIGINAL SCALE A3 AS SHOWN
CONTRACT No. –
DRAWING No. 2000244 .014
ISSUE C

# PRELIMINARY DESIGN PROCEDURE FOR CIRCULAR MANHOLES

DETERMINE VALUES FOR:
B – INSIDE DIAMETER OF MANHOLE RISER (NORMALLY 1540)
D – INSIDE DIAMETER OF POLYETHYLENE PIPE
$\theta_p$ – DIVERT ANGLE OF PIPELINE (DEGREES)

CALCULATE '$D_{critical}$'

$$Dcritical = \sqrt{\frac{B^2}{7}}$$

FOR A STANDARD 1540 MANHOLE Dcritical = 582
WHICH IS EQUIVALENT TO A HDPE100 630-SDR26 PIPE.

IF $D > D_{critical}$ GO TO "COINCIDENT" MANHOLE.

IF $D < D_{critical}$ GO TO "TRANSLATED" MANHOLE.

## COINCIDENT MANHOLES

CHECK WHETHER DESIGN CALLS FOR TYPE A1 OR A2 MANHOLE.

CALCULATE $\theta m$ (LIMITING INCLUDED ANGLE FOR PIPE BEND TO FIT INSIDE MANHOLE)

$$\theta m = 2\ ATAN\left[\frac{\sqrt{B^2 - D^2}}{6\ D}\right]$$

IF $\theta_p =< \theta_m$ TYPE A1 MANHOLE

IF $\theta_p => \theta_m$ TYPE A2 MANHOLE

UPSIZE MANHOLE TO TYPE A1 MANHOLE

CALCULATE BEND RADIUS 'R'

$$R = \frac{\sqrt{B^2 - D^2}}{2\ TAN\left(\frac{\theta_p}{2}\right)}$$

FIND BEND RADIUS CENTRE POINT.

IN THIS CASE THE MANHOLE CENTRE (IPm) IS COINCIDENT WITH THE PIPE INTERSECTON POINT (IPp) THEREFORE Hp = Hm.

$$H_p = H_m = \frac{R}{COS\left(\frac{\theta_p}{2}\right)}$$

## TRANSLATED MANHOLES

CHECK WHETHER DESIGN CALLS FOR TYPE A1 OR A2 MANHOLE.

CALCULATE $\emptyset m$ (LIMITING INCLUDED ANGLE FOR PIPE BEND TO FIT INSIDE MANHOLE)

$$\theta m = 2\ ASIN\left[\frac{B}{7\ D}\right]$$

IF $\theta_p =< \theta_m$ TYPE A1 MANHOLE

IF $\theta > \theta_m$ TYPE A2 MANHOLE

UPSIZE MANHOLE TO TYPE A1 MANHOLE

CALCULATE BEND RADIUS 'R'

$$R = \left[\frac{B}{2\ SIN\left(\frac{\theta_p}{2}\right)}\right] - \frac{D}{2}$$

FIND BEND RADIUS CENTRE POINT.

$$H_p = \frac{R}{COS\left(\frac{\theta_p}{2}\right)}$$

FIND MANHOLE CENTRE POINT.

$$H_m = \frac{B}{2\ TAN\left(\frac{\theta_p}{2}\right)}$$

MANHOLE OFFSET 'A' = $H_p - H_m$

## TABLE SHOWING DIMENSIONS FOR MANHOLE CONSTRUCTION

| MANHOLE NUMBER | TYPE | B | D | $\theta_p$ | $\theta_m$ | R | $T_p$ | $T_m$ | $H_p$ | $H_m$ | A |
|---|---|---|---|---|---|---|---|---|---|---|---|
| | | | | | | | | | | | |
| | | | | | | | | | | | |
| | | | | | | | | | | | |
| | | | | | | | | | | | |
| | | | | | | | | | | | |
| | | | | | | | | | | | |
| | | | | | | | | | | | |
| | | | | | | | | | | | |
| | | | | | | | | | | | |
| | | | | | | | | | | | |
| | | | | | | | | | | | |

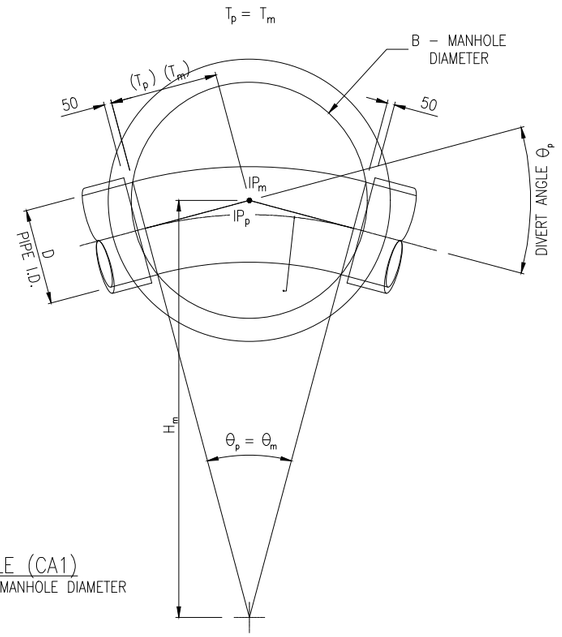


TYPE A1 COINCIDENT MANHOLE (CA1)
R >= 3 x D & PIPE BEND FITS WITHIN MANHOLE DIAMETER

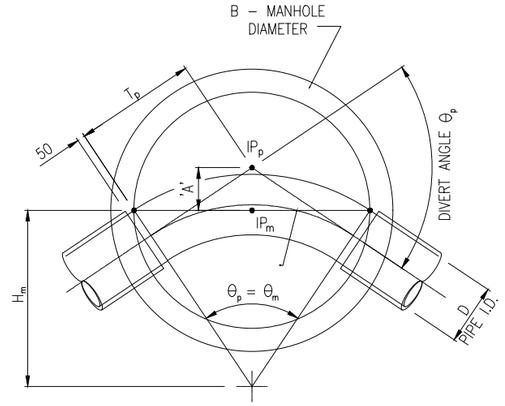


TYPE A1 TRANSLATED MANHOLE (TA1)
R >= 3 x D & PIPE BEND FITS WITHIN MANHOLE DIAMETER

NOTE :– TRANSLATED MANHOLES DO NOT REQUIRE $T_m$ FOR SET OUT.

| ISSUE | DATE | AMENDMENT | BY | APPD. |
|---|---|---|---|---|
| A | 05-25 | REMOVAL OF TYPE A2 MANHOLE DETAIL | F.F. | P.H. |
| – | 09-11 | APPROVED FOR ISSUE | G.S. | J.G. |

| | | |
|---|---|---|
| DESIGNED | J. GRAHAM | 09/11 |
| DES. CHECKED | P. GOWANS | |
| DRAWN | N. SMITH | 09/11 |
| DWG. CHECKED | J. GRAHAM | 09/11 |
| PROJECT LEADER | | |
| INFRAST'R APP'D | | |

J. PIGGOT
OPERATIONS: HEAD OF WASTEWATER

A. DEUTSCHLE
PLANNING: HEAD OF WASTEWATER

Watercare

COPYRIGHT – This drawing, the design concept, remain the exclusive property of Watercare Services Limited and may not be used without approval. Copyright reserved.

WASTEWATER TRANSMISSION STANDARD – CIRCULAR MANHOLES FOR POLYETHYLENE PIPES DN355 TO DN1000

GEOMETRY AND DESIGN CALCULATIONS

CAD FILE 2000244.025 DATE 23-05-25
ORIGINAL SCALE A3 1:40
CONTRACT No. –
REF No.
ISSUE
DWG No. 2000244 .025
A

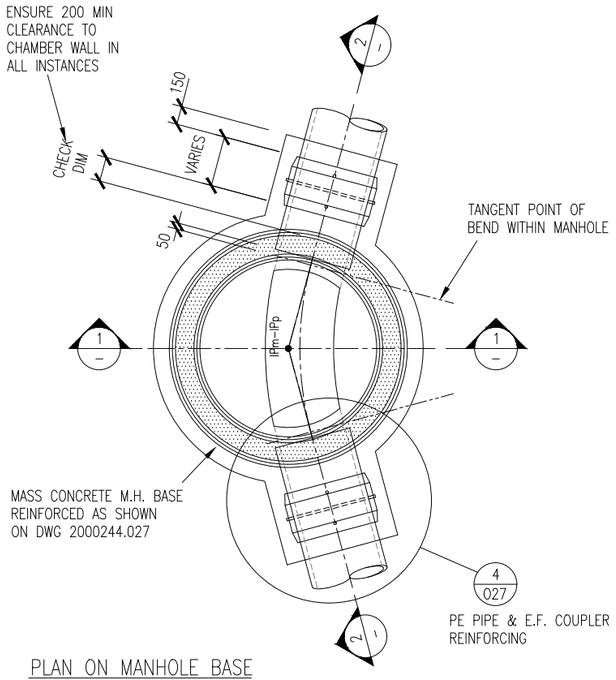


PLAN ON MANHOLE BASE
TYP A1 – COINCIDENT MANHOLE

SCALE 1:50

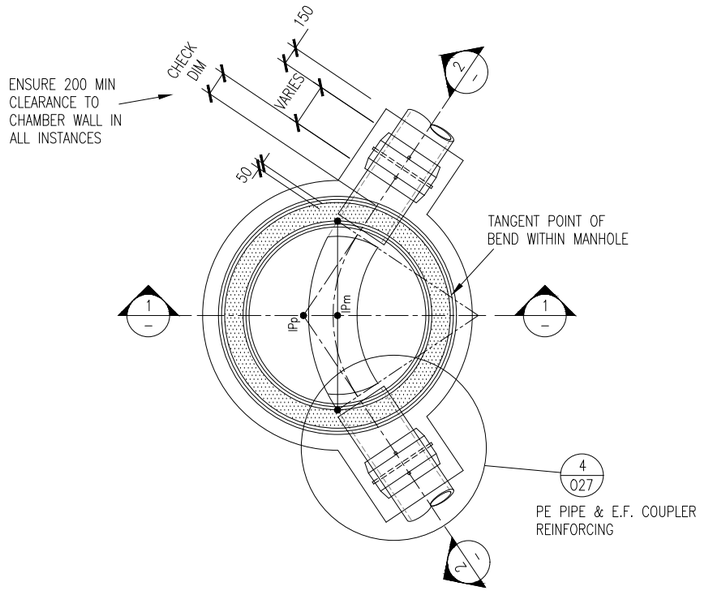


PLAN ON MANHOLE BASE
TYP A1 – TRANSLATED MANHOLE

SCALE 1:50

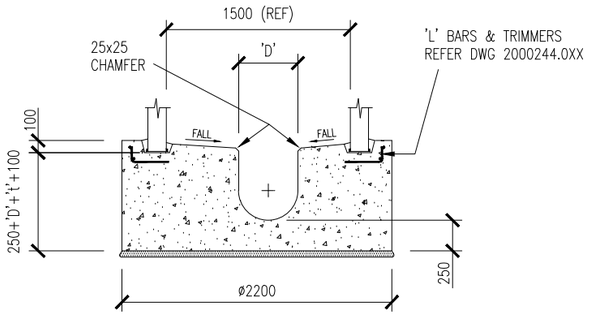


SECTION 1
SCALE 1:50

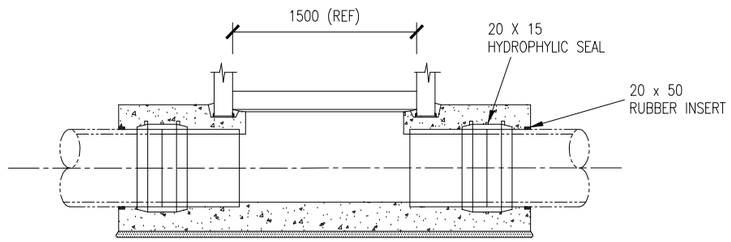


SECTION 2 TYP A1 MANHOLE
SCALE 1:50

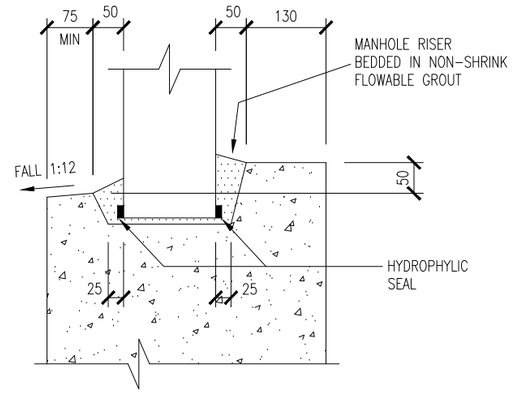


DETAILS OF RECESS FOR MANHOLE RISER

SCALE 1:20

| ISSUE | DATE | AMENDMENT | BY | APPD. |
|---|---|---|---|---|
| A | 05–25 | REMOVAL OF A2 MANHOLE DETAIL | F.F. | P.H. |
| – | 09–11 | APPROVED FOR ISSUE | G.S. | J.G. |

| | | |
|---|---|---|
| DESIGNED | J. GRAHAM | 09/11 |
| DES. CHECKED | P. GOWANS | |
| DRAWN | N. SMITH | 09/11 |
| DWG. CHECKED | J. GRAHAM | 09/11 |
| PROJECT LEADER | | |
| INFRAST'R APP'D | | |

J. PIGGOT
OPERATIONS: HEAD OF WASTEWATER

A. DEUTSCHLE
PLANNING: HEAD OF WASTEWATER

Watercare

COPYRIGHT – This drawing, the design concept, remain the exclusive property of Watercare Services Limited and may not be used without approval. Copyright reserved.

WASTEWATER TRANSMISSION STANDARD – CIRCULAR MANHOLES FOR POLYETHYLENE PIPES DN355 TO DN1000

MANHOLE BASE DIMENSIONS

| | |
|---|---|
| CAD FILE 2000244.026 | DATE 23–05–25 |
| ORIGINAL SCALE A3 AS SHOWN | CONTRACT No. – |
| REF No. | ISSUE |
| DWG No. 2000244 .026 | A |

## REINFORCING NOTES

1. ALL REINFORCEMENT TO BE DEFORMED MILD STEEL
2. ALL CONCRETE TO HAVE A 28 DAY STRENGTH OF 30 MPa
3. PROVIDE 50mm MIN. COVER TO ALL REINFORCEMENT

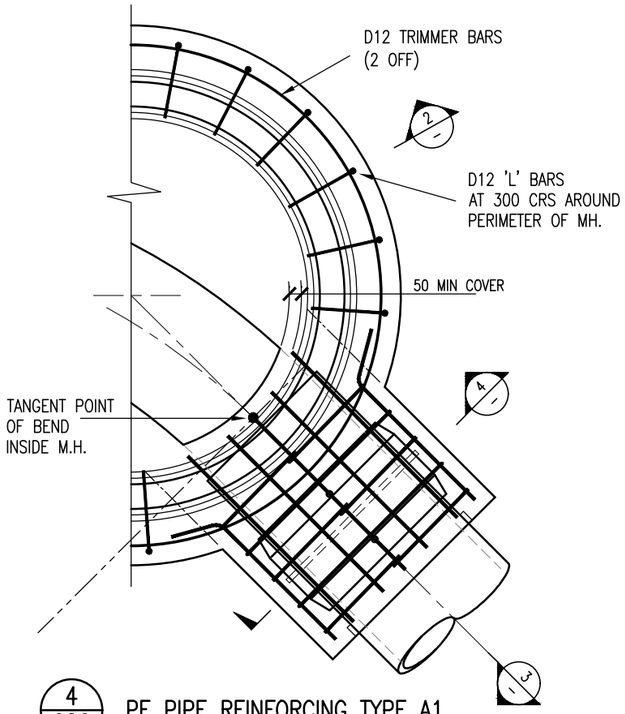


4/026 PE PIPE REINFORCING TYPE A1

SCALE 1:25

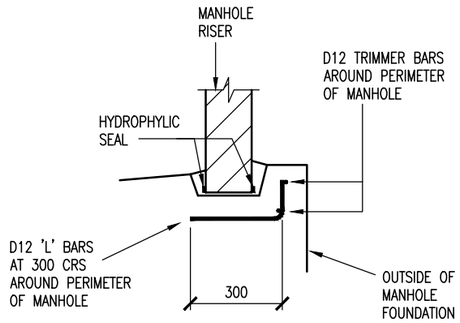


REINFORCING ON PERIMETER OF BASE (ALL MANHOLES)

SECTION 2/– SCALE. 1:20

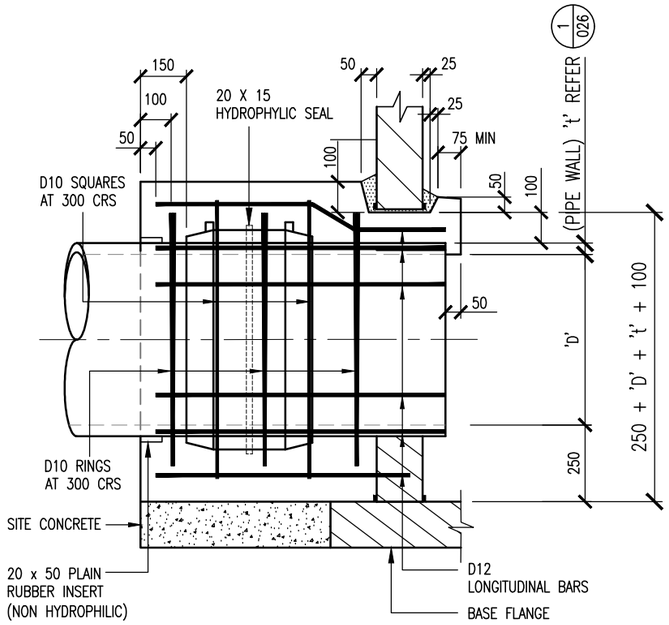


SECTION 3/– REINFORCING FOR BASE EXTENSION – TYP TYPE A1

SCALE. 1:20

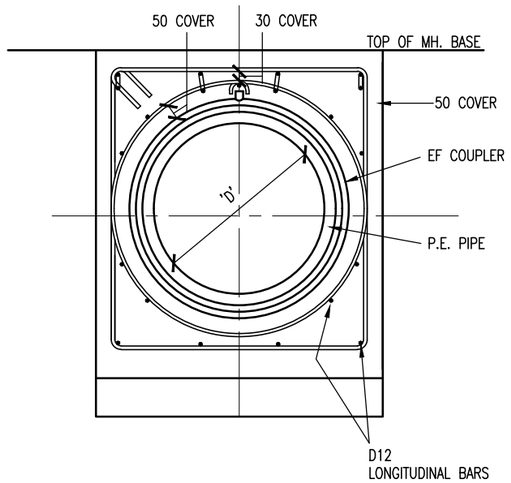


SECTION 4/– SCALE. 1:20

| ISSUE | DATE | AMENDMENT | BY | APPD. |
|---|---|---|---|---|
| A | 05–25 | REMOVAL OF LID CONSTRUCTION DETAIL & UPDATE OF REBARS | F.F. | P.H. |
| – | 09–11 | APPROVED FOR ISSUE | G.S. | J.G. |

| | | |
|---|---|---|
| DESIGNED | J. GRAHAM | 09/11 |
| DES. CHECKED | P. GOWANS | |
| DRAWN | N. SMITH | 09/11 |
| DWG. CHECKED | J. GRAHAM | 09/11 |
| PROJECT LEADER | | |
| INFRAST'R APP'D | | |

J. PIGGOT
OPERATIONS: HEAD OF WASTEWATER

A. DEUTSCHLE
PLANNING: HEAD OF WASTEWATER

Watercare

COPYRIGHT – This drawing, the design concept, remain the exclusive property of Watercare Services Limited and may not be used without approval. Copyright reserved.

# WASTEWATER TRANSMISSION STANDARD – CIRCULAR MANHOLES FOR POLYETHYLENE PIPES DN355 TO DN1000

REINFORCING & STEELWORK

| | |
|---|---|
| CAD FILE 2000244.027 | DATE 23–05–25 |
| ORIGINAL SCALE A3 AS SHOWN | CONTRACT No. – |
| REF No. | ISSUE |
| DWG No. 2000244 .027 | A |

## MANHOLE BRANCH PIPE P.E. CONNECTORS/DROPPERS

| MANHOLE RISER | 1540 I/D | 1980 I/D | 2300 I/D | 2550 I/D |
|---|---|---|---|---|
| END CAP SEAT BRACKET | M.H. P.E. DROPPER PIPES | | | |
| DET 'C' SHEET 41 | 200–SDR17 | 200–SDR17 | 200–SDR17 | 200–SDR17 |
| DET 'C' SHEET 41 | 280–SDR17 | 280–SDR17 | 280–SDR17 | 280–SDR17 |
| DET 'A' SHEET 41 | 355–SDR17 | 355–SDR17 | 355–SDR17 | 355–SDR17 |
| DET 'A' SHEET 41 | N/A | 400–SDR17 | 400–SDR17 | 400–SDR17 |
| DET 'A' SHEET 41 | N/A | 450–SDR17 | 450–SDR17 | 450–SDR17 |
| | INCOMING P.E. CONNECTION PIPES (SUITABLE ALL M.H. RISERS & P.E. DROPPERS) | | | |
| FOR SELECTION REFER DWGS 2000244.038 2000244.039 2000244.040 | 225–SDR13.6 | | | |
| | 280–SDR17 | | | |
| | 315–SDR13.6 | | | |
| | 400–SDR13.6 | 400–SDR17 | | |
| | 450–SDR17 | 450–SDR21 | | |
| | 500–SDR17 | | | |
| | 560–SDR13.6 | 560–SDR17 | | |
| | 630–SDR13.6 | 630–SDR21 | 630–SDR26 | |
| | 710–SDR21 | | | |

### NOTES

1. ALL DROPPERS ARE TO BE INSTALLED IN A SATELLITE MANHOLE PRIOR TO CONNECTION TO THE TRANSMISSION MANHOLE. INSTALLATION OF A DROPPER PIPE WITHIN A TRANSMISSION MANHOLE REQUIRES WSL APPROVAL.
2. DROPPER TO BE AVOIDED WHERE POSSIBLE, AND WHERE REQUIRED SHALL BE DESIGNED ACCORDINGLY.

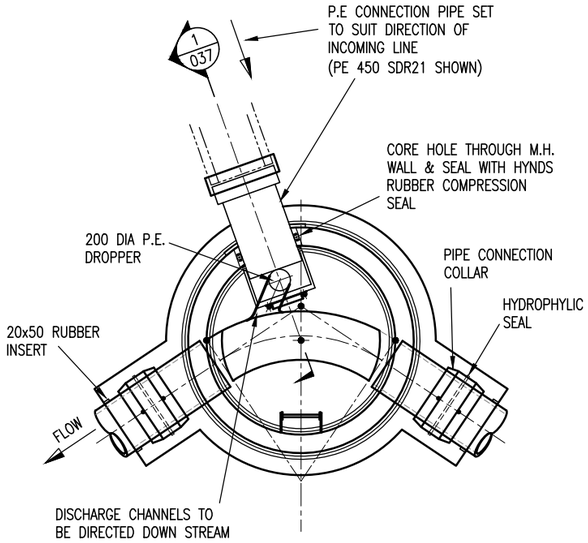


INTERNAL DROP CONNECTION PLAN
TYPICAL FOR 1540–2550 DIA RISERS WITH
P.E. 200–SDR17 (MINIMUM) DROPPER
(1540 DIA RISER SHOWN)

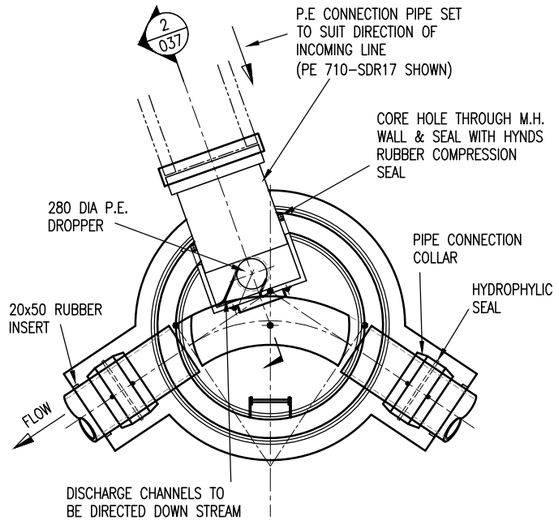


INTERNAL DROP CONNECTION PLAN
TYPICAL FOR 1540–2550 DIA RISERS
P.E. 280–SDR17 DROPPER
(1540 DIA RISER SHOWN)

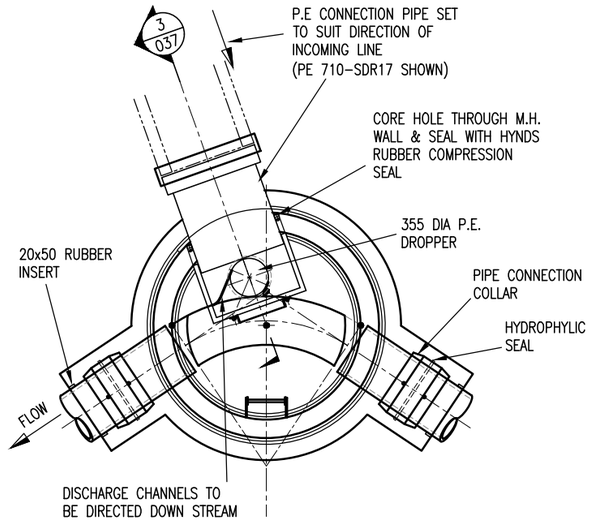


INTERNAL DROP CONNECTION PLAN
TYPICAL FOR 1540–2550 DIA RISERS WITH
P.E. 355–SDR17 DROPPER
(MAXUMUM DROPPER FOR 1540 DIA RISER SHOWN)

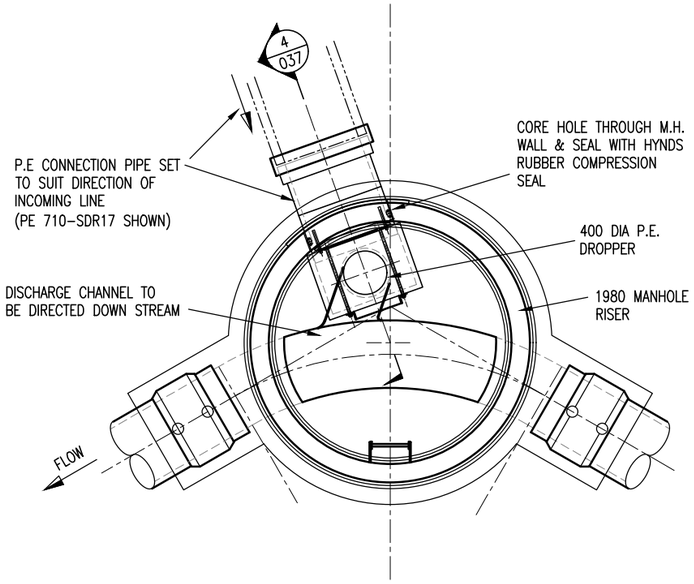


PLAN – INTERNAL DROP CONNECTION
TYPICAL FOR 1980 DIA RISER
P.E. 400–SDR17 DROPPER SHOWN

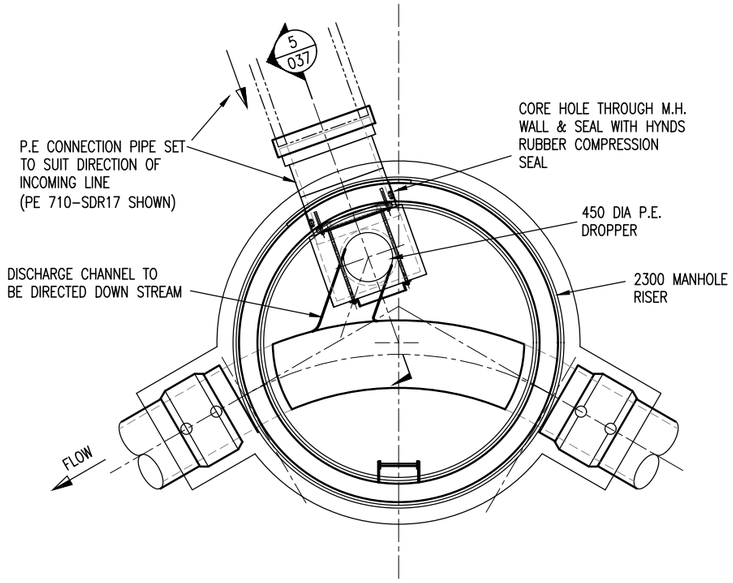


PLAN – INTERNAL DROP CONNECTION
TYPICAL FOR 2300 DIA RISER
P.E. 450–SDR17 (MAXIMUM) DROPPER SHOWN

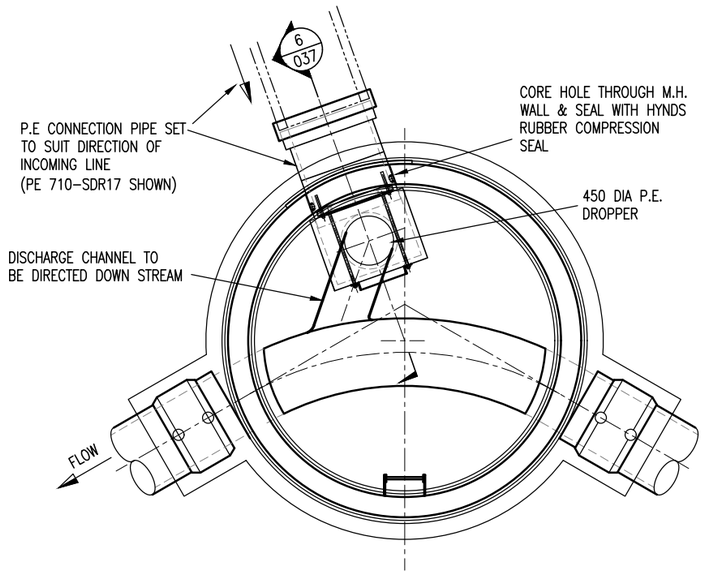


PLAN – INTERNAL DROP CONNECTION
TYPICAL FOR 2550 DIA RISER
P.E. 450–SDR17 (MAXIMUM) DROPPER SHOWN

| ISSUE | DATE | AMENDMENT | BY | APPD. |
|---|---|---|---|---|
| A | 05–25 | MINOR NOTES UPDATE | F.F. | P.H. |
| – | 09–11 | APPROVED FOR ISSUE | G.S. | J.G. |

| | | |
|---|---|---|
| DESIGNED | J. GRAHAM | 09/11 |
| DES. CHECKED | P. GOWANS | |
| DRAWN | N. SMITH | 09/11 |
| DWG. CHECKED | J. GRAHAM | 09/11 |
| PROJECT LEADER | | |
| INFRAST'R APP'D | | |

J. PIGGOT
OPERATIONS: HEAD OF WASTEWATER

A. DEUTSCHLE
PLANNING: HEAD OF WASTEWATER

Watercare

COPYRIGHT – This drawing, the design concept, remain the exclusive property of Watercare Services Limited and may not be used without approval. Copyright reserved.

WASTEWATER TRANSMISSION STANDARD – CIRCULAR MANHOLES
FOR POLYETHYLENE PIPES DN355 TO DN1000
PLAN VIEW – BRANCH PIPE CONNECTIONS WITH INTERNAL P.E. DROPPERS

| | | | |
|---|---|---|---|
| CAD FILE 2000244.036 | | DATE 23–05–25 | |
| ORIGINAL SCALE A3 1:50 | | CONTRACT No. – | |
| REF No. | | | ISSUE |
| DWG No. 2000244 .036 | | | A |

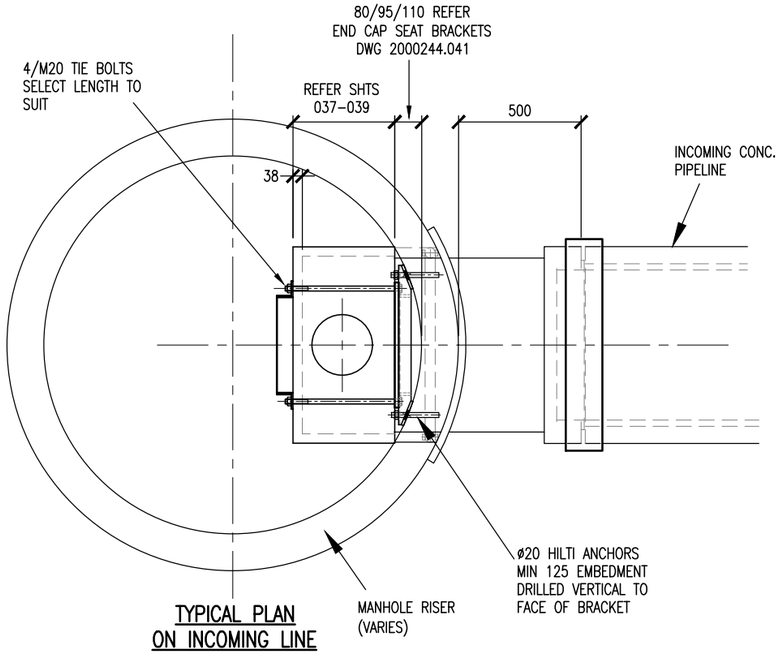


TYPICAL PLAN
ON INCOMING LINE

SCALE 1:25

## NOTES

1. ALL DROPPERS ARE TO BE INSTALLED IN A SATELLITE MANHOLE PRIOR TO CONNECTION TO THE TRANSMISSION MANHOLE. INSTALLATION OF A DROPPER PIPE WITHIN A TRANSMISSION MANHOLE REQUIRES WSL APPROVAL.

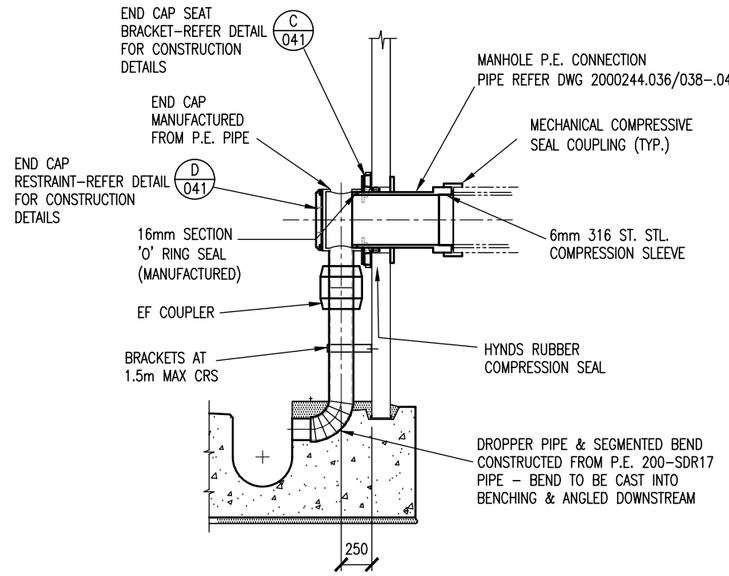


SECTION 1/036 SCALE 1:50

P.E. 200–SDR17 INTERNAL DROPPER
(TYPICAL SECTION)

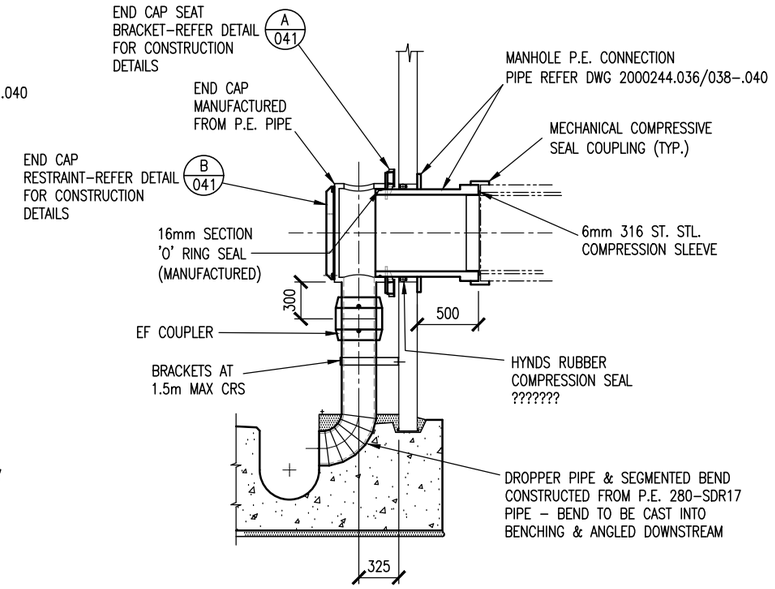


SECTION 2/036 SCALE 1:50

P.E. 280–SDR17 INTERNAL DROPPER
(TYPICAL SECTION)

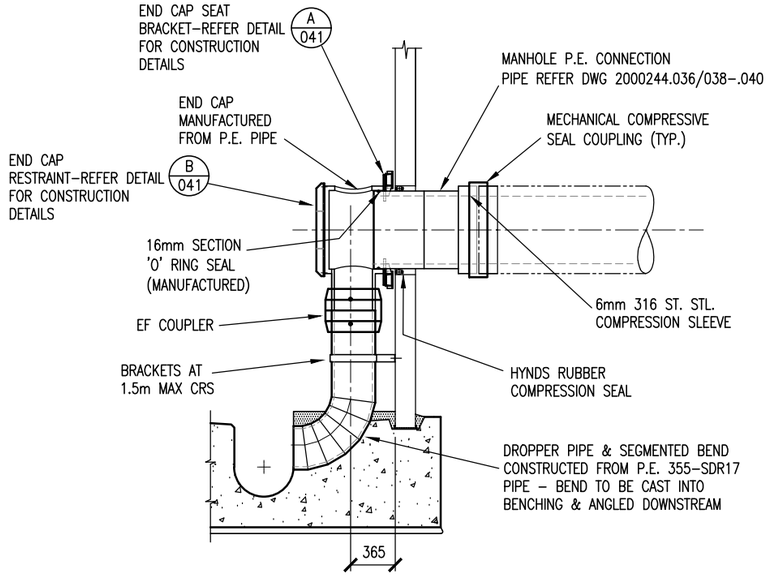


SECTION 5/036 SCALE 1:50

P.E. 355–SDR17 INTERNAL DROPPER
(TYPICAL SECTION)

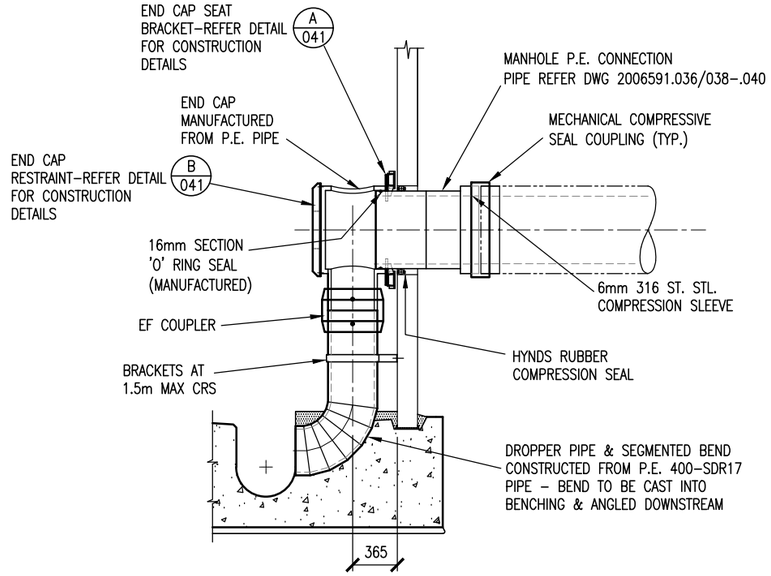


SECTION 6/036 SCALE 1:50

P.E. 400–SDR17 INTERNAL DROPPER
(TYPICAL SECTION)

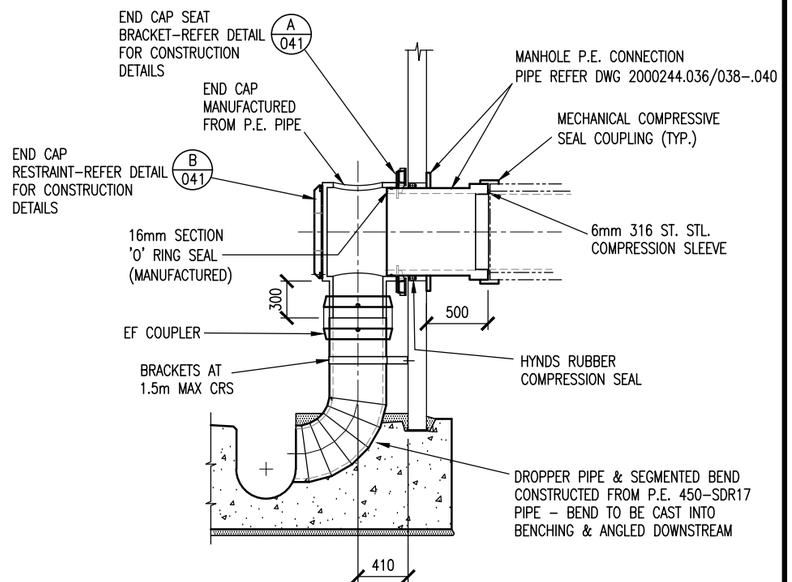


SECTION 6/036 & 7/036 SCALE 1:50

P.E. 450–SDR17 INTERNAL DROPPER
(TYPICAL SECTION)

| ISSUE | DATE | AMENDMENT | BY | APPD. |
|---|---|---|---|---|
| A | 05–25 | MINOR NOTES UPDATE | F.F. | P.H. |
| – | 09–11 | APPROVED FOR ISSUE | G.S. | J.G. |

| | | |
|---|---|---|
| DESIGNED | J. GRAHAM | 09/11 |
| DES. CHECKED | P. GOWANS | |
| DRAWN | N. SMITH | 09/11 |
| DWG. CHECKED | J. GRAHAM | 09/11 |
| PROJECT LEADER | | |
| INFRAST'R APP'D | | |

J. PIGGOT
OPERATIONS: HEAD OF WW

A. DEUTSCHLE
PLANNING: HEAD OF WW

Watercare

COPYRIGHT – This drawing, the design concept, remain the exclusive property of Watercare Services Limited and may not be used without approval. Copyright reserved.

# WASTEWATER TRANSMISSION STANDARD – CIRCULAR MANHOLES FOR POLYETHYLENE DROPPER PIPES DN355 TO DN1000

SECTIONS – BRANCH PIPE CONNECTIONS WITH INTERNAL P.E. DROPPERS

| | |
|---|---|
| CAD FILE 2000244.037 | DATE 23/05/2025 |
| ORIGINAL SCALE A3 AS SHOWN | CONTRACT No. – |
| REF No. | ISSUE |
| DWG No. 2000244 .037 | A |

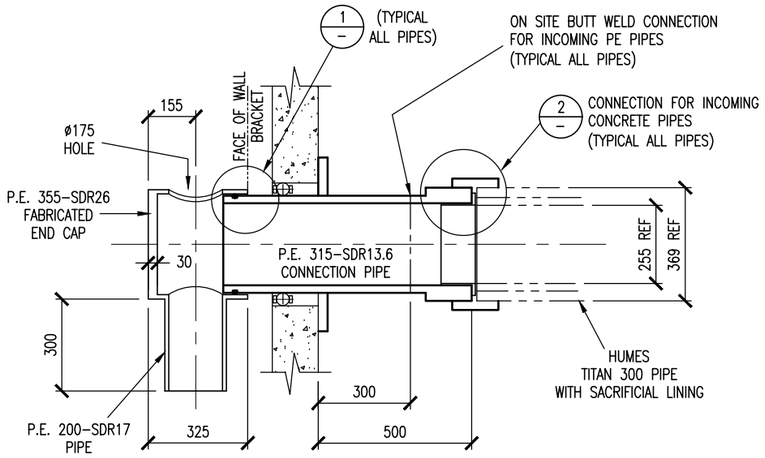


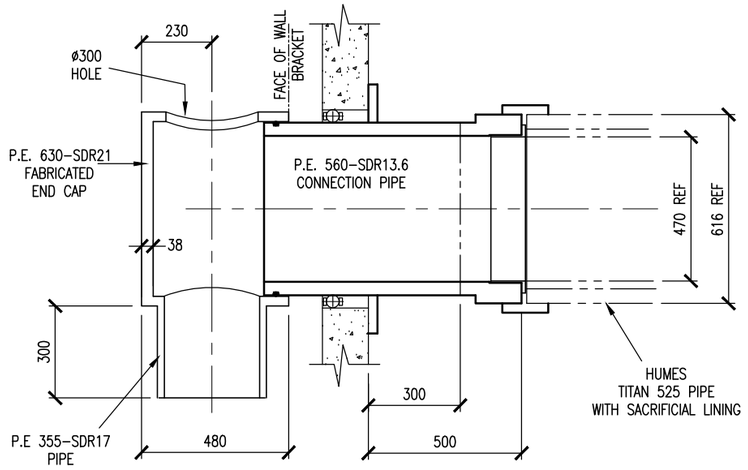


## CONNECTION & END CAP DETAILS FOR P.E. 355-SDR17 M.H. DROPPER PIPE

SCALE 1:20

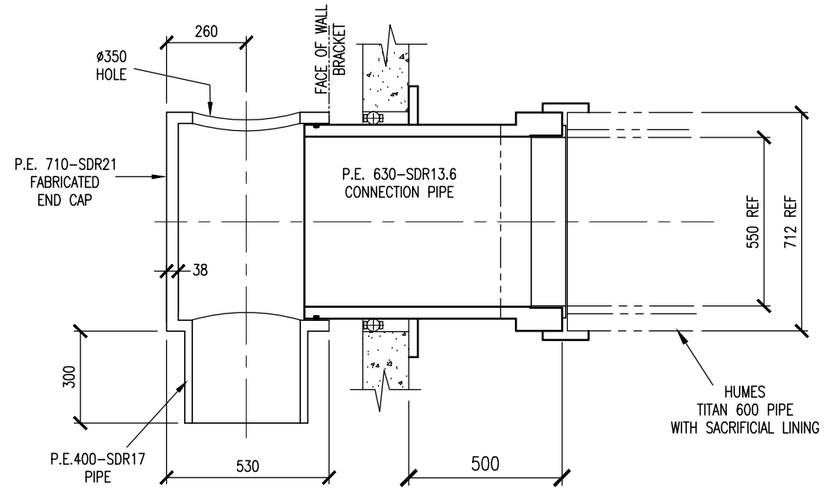


## CONNECTION & END CAP DETAILS FOR P.E. 400-SDR17 M.H. DROPPER PIPE

SCALE 1:20

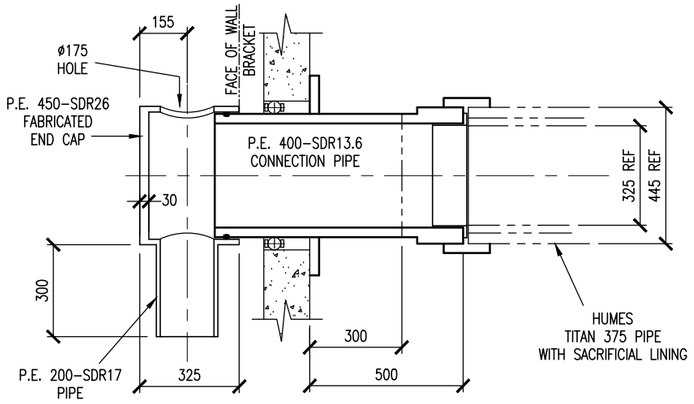


## CONNECTION & END CAP DETAILS FOR P.E. 200-SDR17 M.H. DROPPER PIPE

SCALE 1:20

## NOTES

1. ALL DROPPERS ARE TO BE INSTALLED IN A SATELLITE MANHOLE PRIOR TO CONNECTION TO THE TRANSMISSION MANHOLE. INSTALLATION OF A DROPPER PIPE WITHIN A TRANSMISSION MANHOLE REQUIRES WSL APPROVAL.

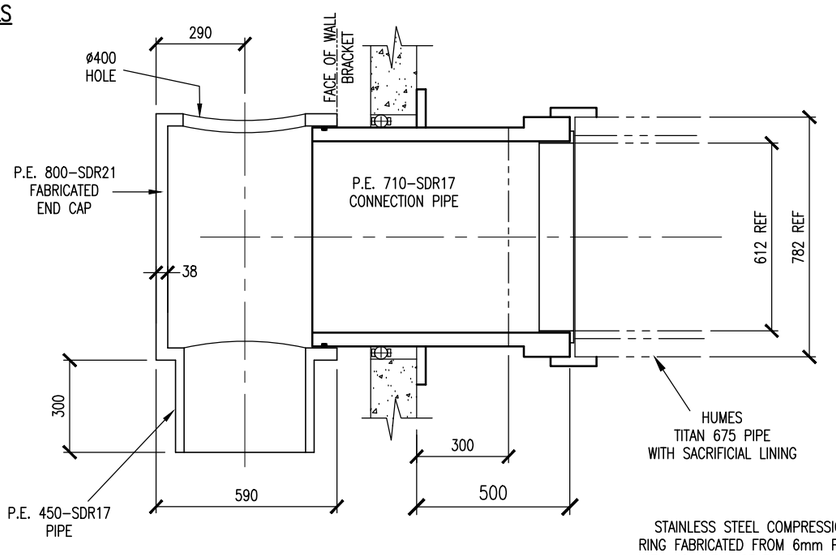


## CONNECTION & END CAP DETAILS FOR P.E. 450-SDR17 M.H. DROPPER PIPE

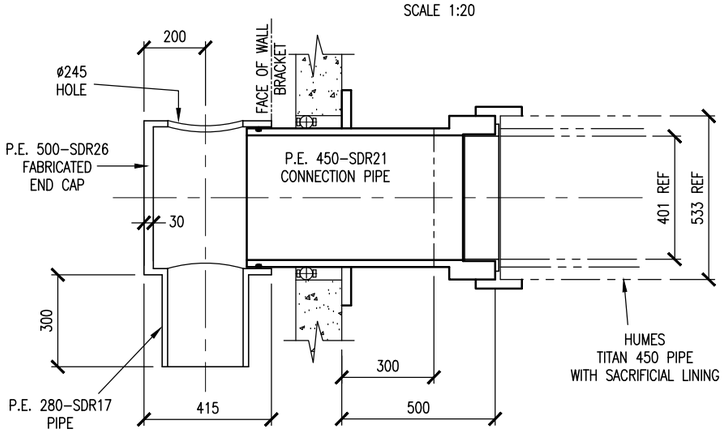


## CONNECTION & END CAP DETAILS FOR P.E. 280-SDR17 M.H. DROPPER PIPES

SCALE 1:20

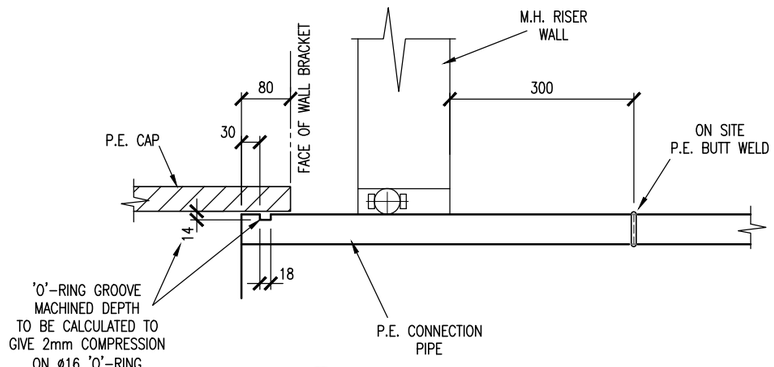


## 1 'O'-RING MACHINING

SCALE 1:10

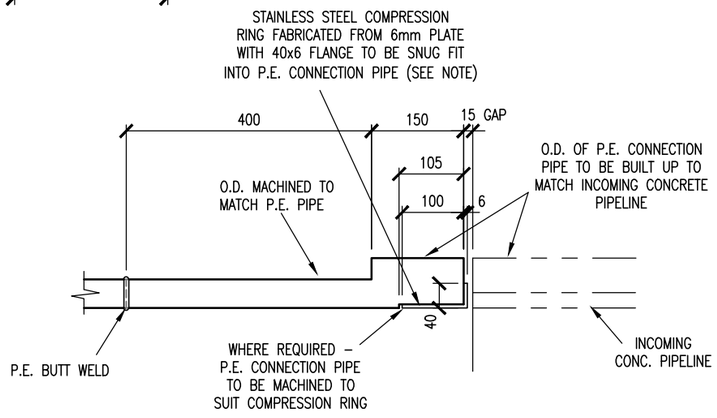


## 2 COMPRESSION RING

SCALE 1:10

NOTE:– I.D OF COMPRESSION RING MUST BE EQUAL TO OR LARGER THAN I.D. OF INCOMING PIPELINE

| ISSUE | DATE | AMENDMENT | BY | APPD. |
|---|---|---|---|---|
| A | 05-25 | MINOR NOTES UPDATE | F.F. | P.H. |
| – | 09-11 | APPROVED FOR ISSUE | G.S. | J.G. |

| | | |
|---|---|---|
| DESIGNED | J. GRAHAM | 09/11 |
| DES. CHECKED | P. GOWANS | |
| DRAWN | N. SMITH | 09/11 |
| DWG. CHECKED | J. GRAHAM | 09/11 |
| PROJECT LEADER | | |
| INFRAST'R APP'D | | |

J. PIGGOT
OPERATIONS: HEAD OF WW

A. DEUTSCHLE
PLANNING: HEAD OF WW

Watercare

COPYRIGHT – This drawing, the design concept, remain the exclusive property of Watercare Services Limited and may not be used without approval. Copyright reserved.

# WASTEWATER TRANSMISSION STANDARD – CIRCULAR MANHOLES FOR POLYETHYLENE PIPES DN355 TO DN1000

P.E. CONNECTION & INTERNAL DROPPERS FOR HUMES "TITAN" PIPELINES

| | |
|---|---|
| CAD FILE 2000244.038 | DATE 23/05/2025 |
| ORIGINAL SCALE A3 AS SHOWN | CONTRACT No. – |
| REF No. | ISSUE |
| DWG No. 2000244 .038 | A |

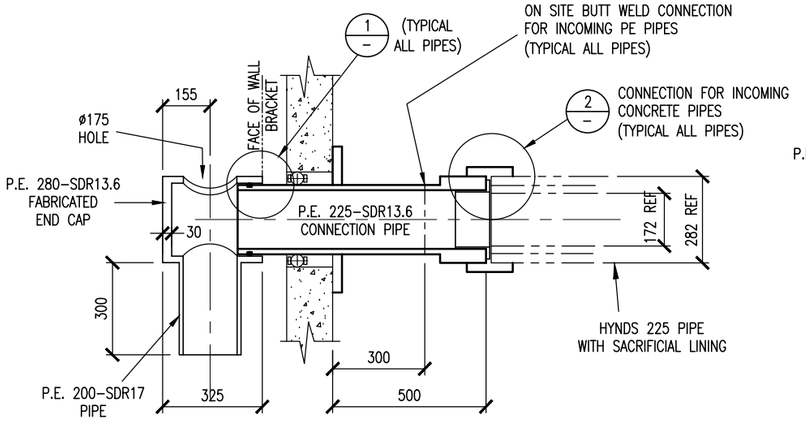


## CONNECTION & END CAP DETAILS FOR P.E. 200-SDR17 M.H. DROPPER PIPE

SCALE 1:20

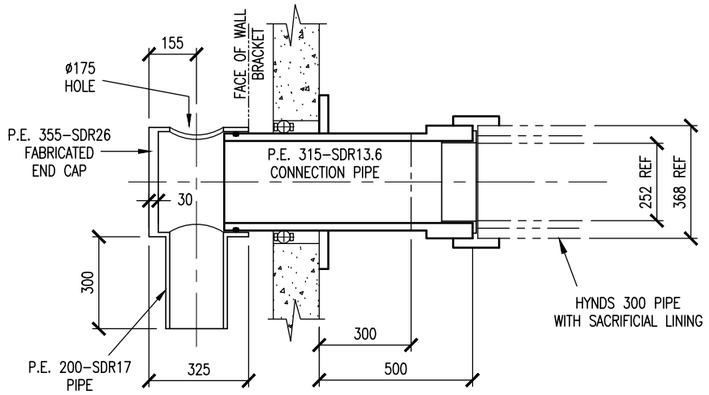


## CONNECTION & END CAP DETAILS FOR P.E. 280-SDR17 M.H. DROPPER PIPE

SCALE 1:20

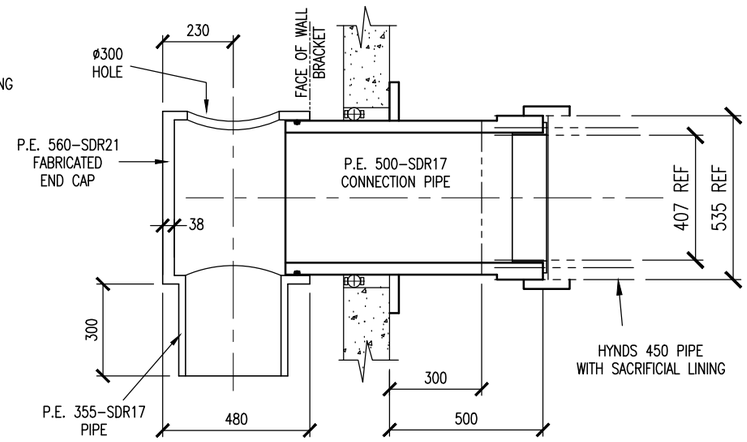


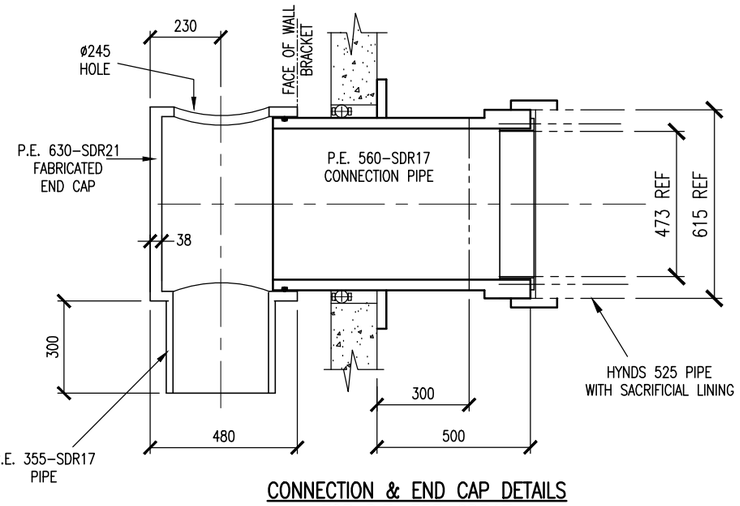


## CONNECTION & END CAP DETAILS FOR P.E. 355-SDR17 M.H. DROPPER PIPE

SCALE 1:20

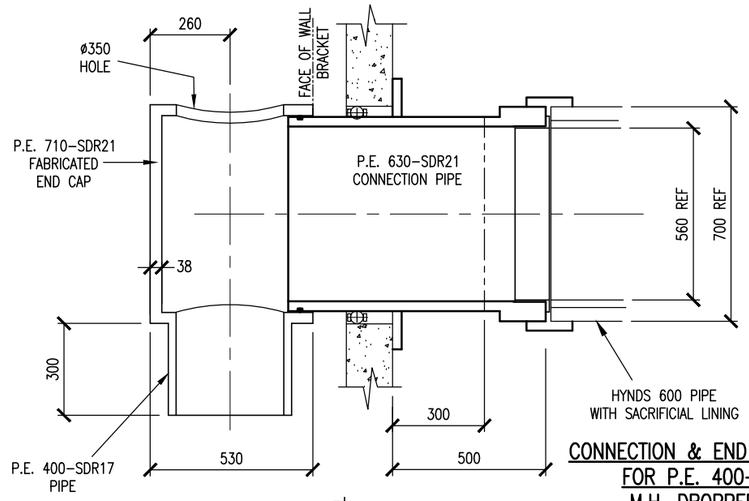


## CONNECTION & END CAP DETAILS FOR P.E. 400-SDR17 M.H. DROPPER PIPE

SCALE 1:20

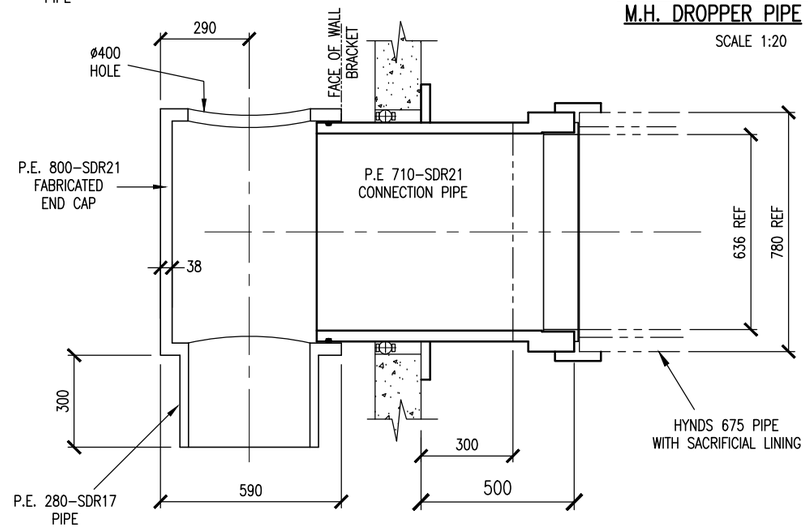


## CONNECTION & END CAP DETAILS FOR P.E. 450-SDR17 M.H. DROPPER PIPE

SCALE 1:20

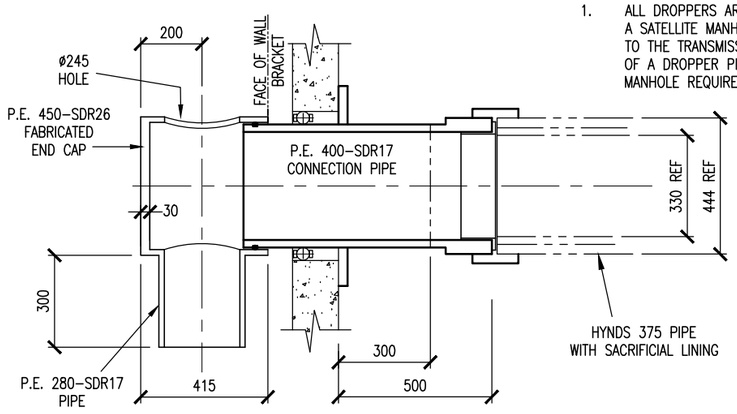


## CONNECTION & END CAP DETAILS FOR P.E. 280-SDR17 M.H. DROPPER PIPE

SCALE 1:20

## NOTES

1. ALL DROPPERS ARE TO BE INSTALLED IN A SATELLITE MANHOLE PRIOR TO CONNECTION TO THE TRANSMISSION MANHOLE. INSTALLATION OF A DROPPER PIPE WITHIN A TRANSMISSION MANHOLE REQUIRES WSL APPROVAL.

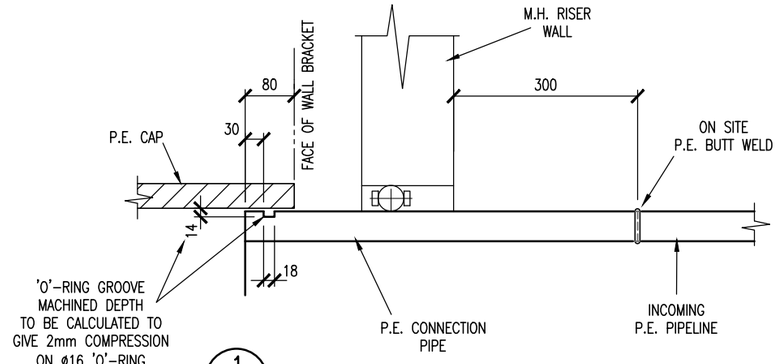


1 – 'O'-RING MACHINING

SCALE 1:10

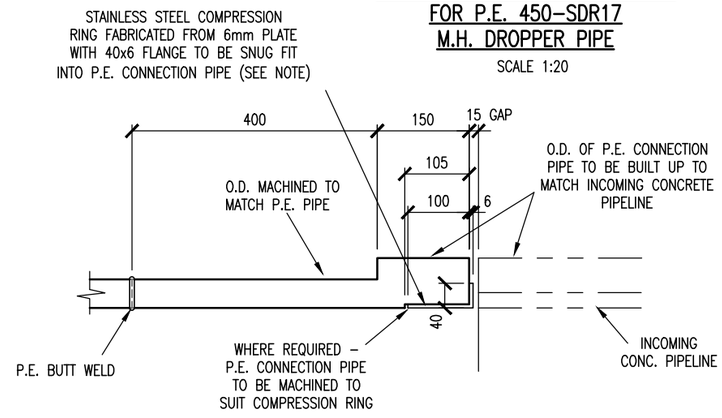


2 – COMPRESSION RING

SCALE 1:10

NOTE:– I.D OF COMPRESSION RING MUST BE EQUAL TO OR LARGER THAN I.D. OF INCOMING PIPELINE

| ISSUE | DATE | AMENDMENT | BY | APPD. |
|---|---|---|---|---|
| A | 05-25 | MINOR NOTES UPDATE | F.F. | P.H. |
| – | 09-11 | APPROVED FOR ISSUE | G.S. | J.G. |

| | | |
|---|---|---|
| DESIGNED | J. GRAHAM | 09/11 |
| DES. CHECKED | P. GOWANS | |
| DRAWN | N. SMITH | 09/11 |
| DWG. CHECKED | J. GRAHAM | 09/11 |
| PROJECT LEADER | | |
| INFRAST'R APP'D | | |

J. PIGGOT
OPERATIONS: HEAD OF WW

A. DEUTSCHLE
PLANNING: HEAD OF WW

Watercare

COPYRIGHT – This drawing, the design concept, remain the exclusive property of Watercare Services Limited and may not be used without approval. Copyright reserved.

# WASTEWATER TRANSMISSION STANDARD – CIRCULAR MANHOLES FOR POLYETHYLENE PIPES DN355 TO DN1000

P.E. CONNECTIONS & INTERNAL DROPPERS FOR HYNDS PIPELINES

| | |
|---|---|
| CAD FILE 2000244.039 | DATE 23/05/2025 |
| ORIGINAL SCALE A3 AS SHOWN | CONTRACT No. – |
| REF No. | ISSUE |
| DWG No. 2000244 .039 | A |

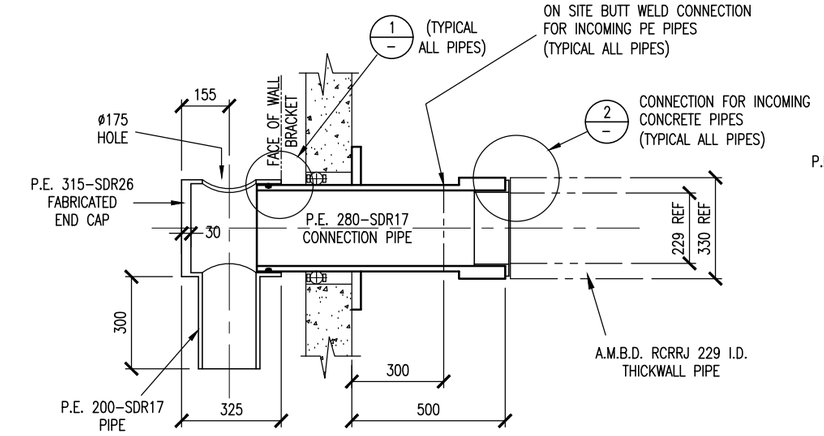


CONNECTION & END CAP DETAILS
FOR P.E. 200-SDR17
M.H. DROPPER PIPE
SCALE 1:20

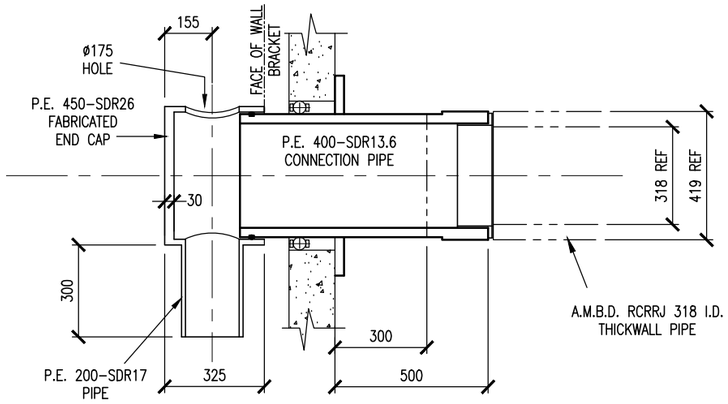


CONNECTION & END CAP DETAILS
FOR P.E. 280-SDR17
M.H. DROPPER PIPES
SCALE 1:20

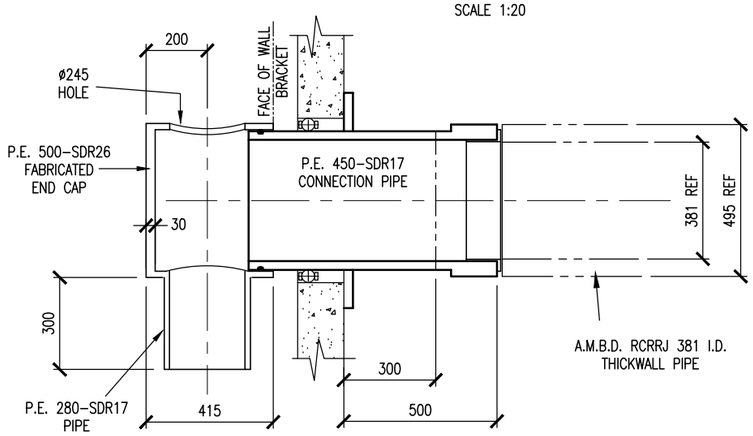


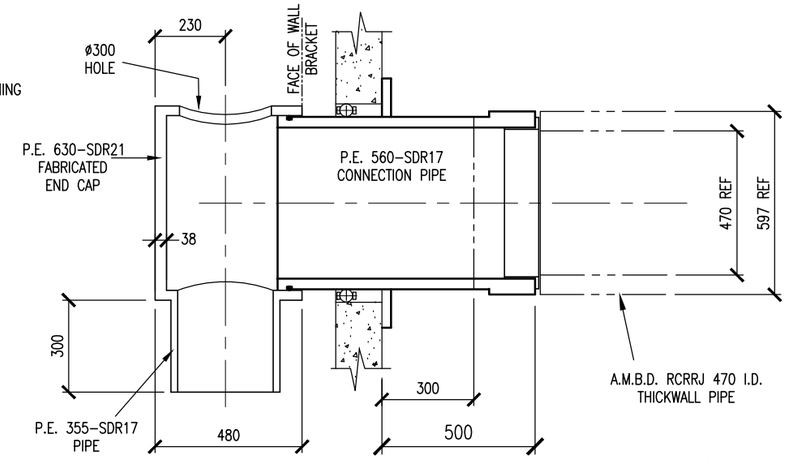


CONNECTION & END CAP DETAILS
FOR P.E. 355-SDR17
M.H. DROPPER PIPE
SCALE 1:20

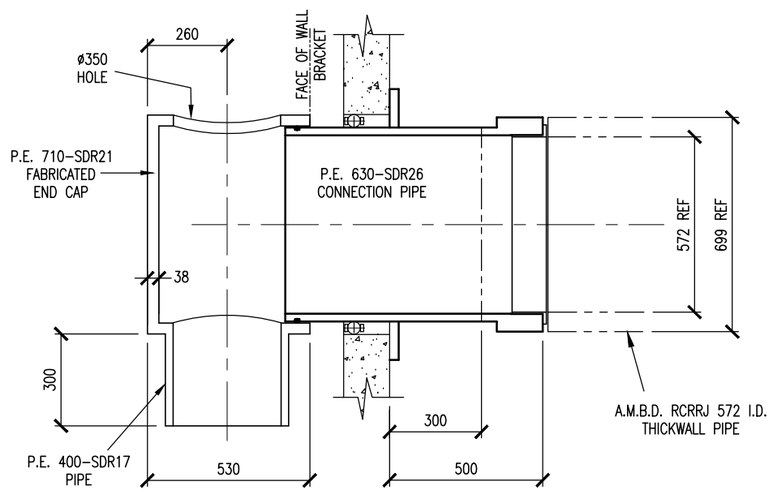


CONNECTION & END CAP DETAILS
FOR P.E. 400-SDR17
M.H. DROPPER PIPE
SCALE 1:20

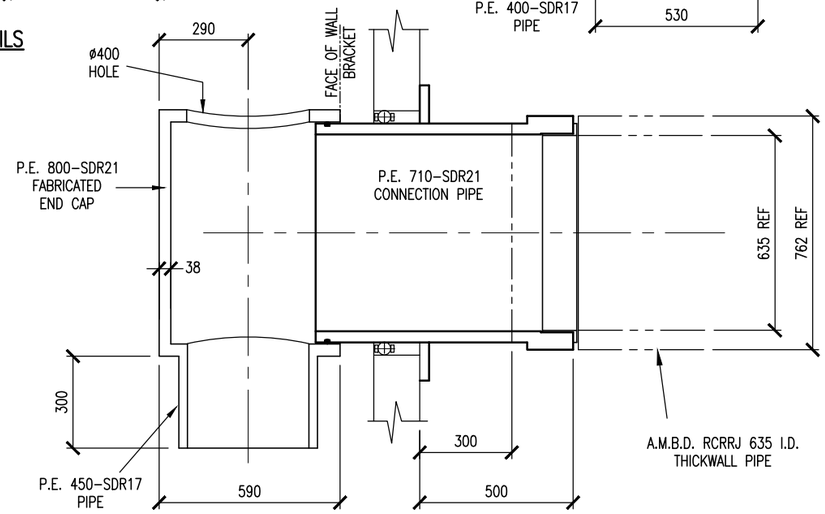


CONNECTION & END CAP DETAILS
FOR P.E. 450-SDR17
M.H. DROPPER PIPE
SCALE 1:20

## NOTES

1. ALL DROPPERS ARE TO BE INSTALLED IN A SATELLITE MANHOLE PRIOR TO CONNECTION TO THE TRANSMISSION MANHOLE. INSTALLATION OF A DROPPER PIPE WITHIN A TRANSMISSION MANHOLE REQUIRES WSL APPROVAL.

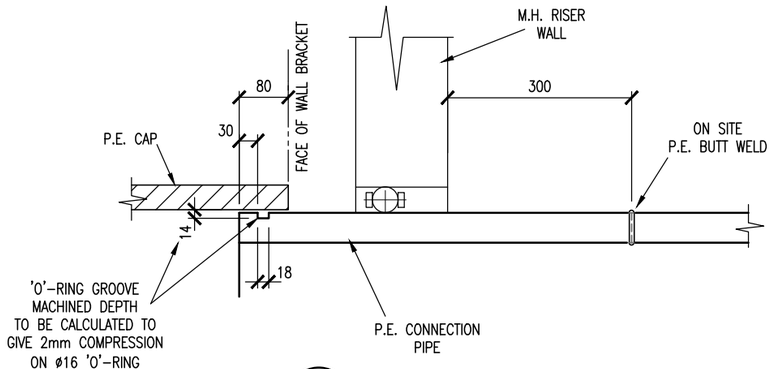


1 — 'O'-RING MACHINING
SCALE 1:10

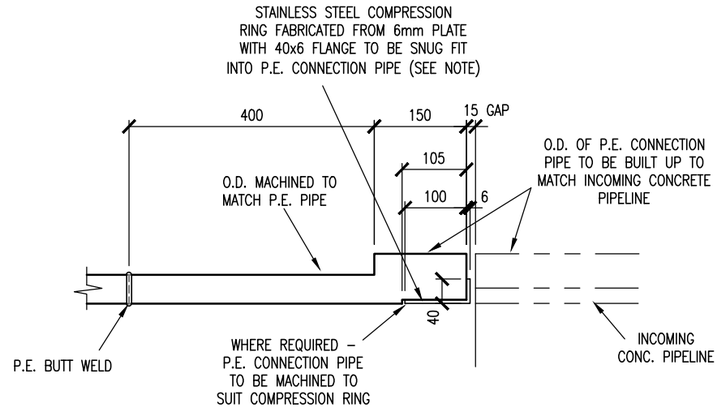


2 — COMPRESSION RING
SCALE 1:10

NOTE:– I.D OF COMPRESSION RING MUST BE EQUAL TO OR LARGER THAN I.D. OF INCOMING PIPELINE

| ISSUE | DATE | AMENDMENT | BY | APPD. |
|---|---|---|---|---|
| A | 05-25 | MINOR NOTES UPDATE | F.F. | P.H. |
| – | 09-11 | APPROVED FOR ISSUE | G.S. | J.G. |

| | | |
|---|---|---|
| DESIGNED | J. GRAHAM | 09/11 |
| DES. CHECKED | P. GOWANS | |
| DRAWN | N. SMITH | 09/11 |
| DWG. CHECKED | J. GRAHAM | 09/11 |
| PROJECT LEADER | | |
| INFRAST'R APP'D | | |

J. PIGGOT
OPERATIONS: HEAD OF WW

A. DEUTSCHLE
PLANNING: HEAD OF WW

Watercare

COPYRIGHT – This drawing, the design concept, remain the exclusive property of Watercare Services Limited and may not be used without approval. Copyright reserved.

# WASTEWATER TRANSMISSION STANDARD – CIRCULAR MANHOLES FOR POLYETHYLENE PIPES DN355 TO DN1000

P.E. CONNECTIONS & INTERNAL DROPPERS FOR A.M.B.D. THICKWALL PIPELINES

| | |
|---|---|
| CAD FILE 2000244.040 | DATE 23/05/2025 |
| ORIGINAL SCALE A3 AS SHOWN | CONTRACT No. – |
| REF No. | ISSUE |
| DWG No. 2000244 .040 | A |

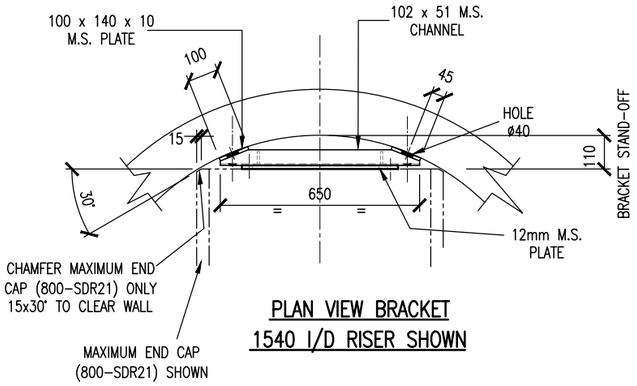


PLAN VIEW BRACKET
1540 I/D RISER SHOWN

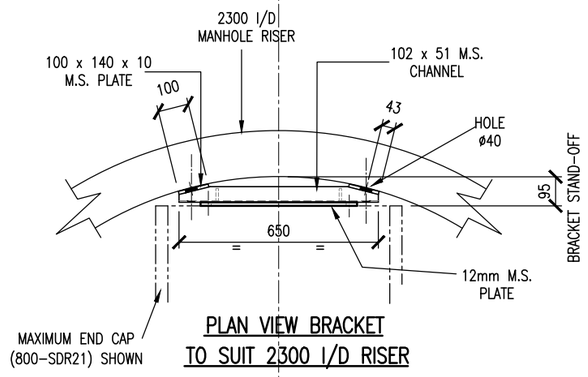


PLAN VIEW BRACKET
TO SUIT 2300 I/D RISER

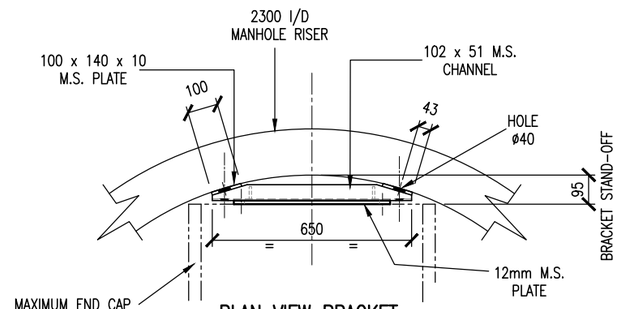


PLAN VIEW BRACKET
TO SUIT 1980 I/D RISER

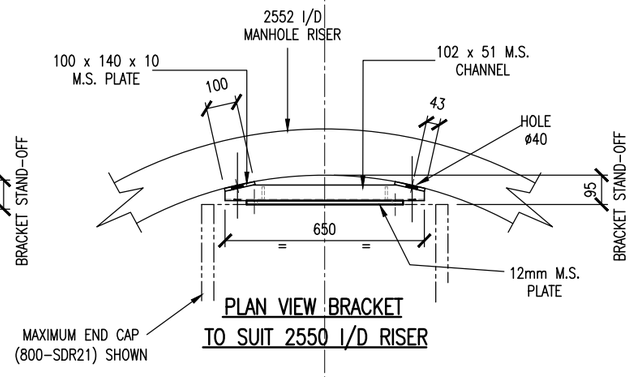


PLAN VIEW BRACKET
TO SUIT 2550 I/D RISER

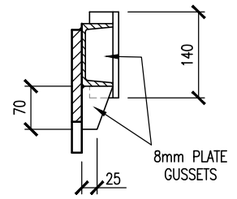


SECTION 1 SCALE. 1:10

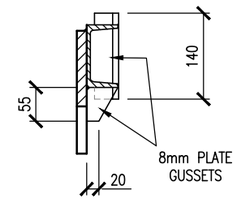


SECTION 2 SCALE. 1:10

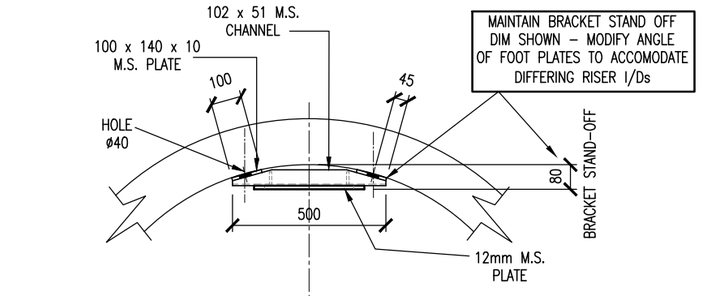


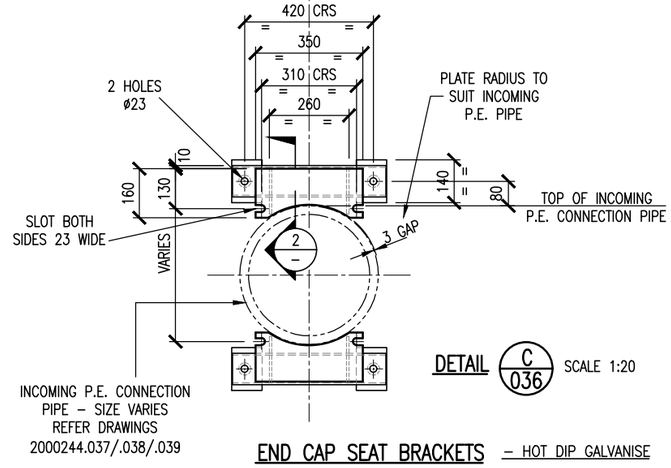


DETAIL C/036 SCALE 1:20

END CAP SEAT BRACKETS – HOT DIP GALVANISE

MAXIMUM INCOMING = 450-SDR21
MAXIMUM DROPPER = 280-SDR17

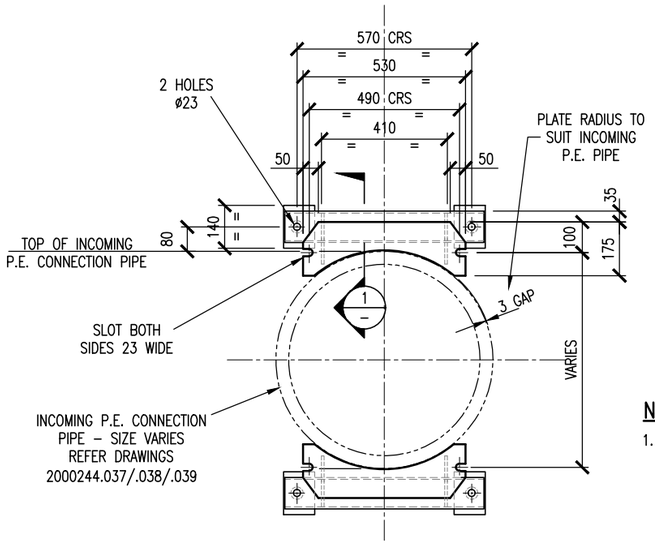


END CAP SEAT BRACKETS – HOT DIP GALVANISE

DETAIL A/036 SCALE 1:20

MAXIMUM INCOMING = 710-SDR21
MAXIMUM DROPPER = 450-SDR17

## NOTES

1. ALL DROPPERS ARE TO BE INSTALLED IN A SATELLITE MANHOLE PRIOR TO CONNECTION TO THE TRANSMISSION MANHOLE. INSTALLATION OF A DROPPER PIPE WITHIN A TRANSMISSION MANHOLE REQUIRES WSL APPROVAL.

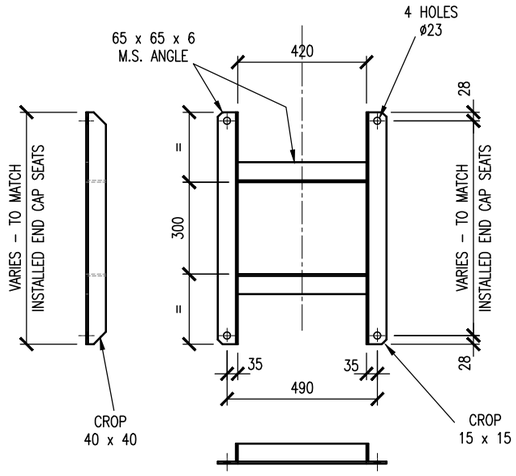


END CAP RESTRAINT – HOT DIP GALVANISE
MAXIMUM DROPPER = 450-SDR17

DETAIL B/036 SCALE 1:20

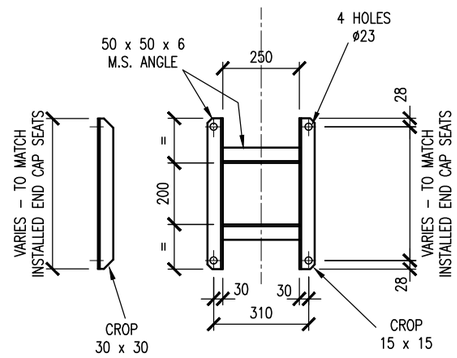


END CAP RESTRAINT – HOT DIP GALVANISE
MAXIMUM DROPPER = 280-SDR17

DETAIL D/036 SCALE 1:20

| ISSUE | DATE | AMENDMENT | BY | APPD. |
|---|---|---|---|---|
| A | 05-25 | MINOR NOTES UPDATE | F.F. | P.H. |
| – | 09-11 | APPROVED FOR ISSUE | G.S. | J.G. |

| | | |
|---|---|---|
| DESIGNED | J. GRAHAM | 09/11 |
| DES. CHECKED | P. GOWANS | |
| DRAWN | N. SMITH | 09/11 |
| DWG. CHECKED | J. GRAHAM | 09/11 |
| PROJECT LEADER | | |
| INFRAST'R APP'D | | |

J. PIGGOT
OPERATIONS: HEAD OF WW

A. DEUTSCHLE
PLANNING: HEAD OF WW

Watercare

COPYRIGHT – This drawing, the design concept, remain the exclusive property of Watercare Services Limited and may not be used without approval. Copyright reserved.

# WASTEWATER TRANSMISSION STANDARD – CIRCULAR MANHOLES FOR POLYETHYLENE PIPES DN355 TO DN1000

END CAP SEATS & RESTRAINTS DETAILS

| | |
|---|---|
| CAD FILE 2000244.041 | DATE 23-5-2025 |
| ORIGINAL SCALE A3 AS SHOWN | CONTRACT No. – |
| REF No. | ISSUE |
| DWG No. 2000244 .041 | A |